DOCUMENT DATA FORM 1 and 2 **WTCI-1057-LERA**

Your Name: Nick Carino

Document Title or Description (max. 254 characters): Circle: Same as cover (or fill in below)

Drawing Book 7, Chapter 1 & 2: Floor trusses

Include work order no. and floor no. if applicable

Roll # DB03	**Doc. ID (report #, dwg. #):**	
Document Date: 1968	**Document Author Name:**	**Author Organization:** SHC&R

KEYWORDS – HIGHLIGHT ALL THAT APPLY

Level 1

Bankers Trust	Project 4	WTC 1 - North Tower	Add
Below Grade	Project 5	WTC 2 - South Tower	
Concourse	Project 6	WTC 3 - Marriot Hotel	
Electrical Substation	Project 7	WTC 4 - South Plaza Bldg.	
Liberty Plaza	Project 8	WTC 5 - North Plaza Bldg	
PATH Station	WFC 1 - Oppenhiemer Dow	WTC 6 - Customs House	
PATH Terminal	WFC 2 - Tower B	WTC 7	
Project 1	WFC 3 - American Express	WTC Complex	
Project 2	WFC 4 - Tower D	WTC Plaza	
Project 3			

Level 2

Accident analysis & risk	Fire protection	Misc. Performance Problems	Structural
Architectural	Fire service	News coverage	Tenant alterations
Data request	Landscaping	Police	Tenant Space
Emergency management	Management	Security	Add
Evacuation	Mech./elec.		

Level 3

1993 explosion	Cranes	Frame	Roof	Weight
A/E fitout	Criteria	Frame analysis	Safety	Weld detail
A-242	Dampers	Frequency	Schedule	Weld size
A-36	Debris	Fuel	Sculpture	Welding
A-497	Deck	Furniture layout	Security system	Wind
Aircraft impact	Deflection	Generators	Shear knuckle	Windows
Air cooled condensers	Demolition	Guidelines	Shear test	Yield strength
Analysis	Design	Gypsum board	Shear Stud	Add
Angles	Detailing	Hat truss	Shop drawings	Drawing books
Antenna	Doors	Human comfort	Shortening	
Artifacts	Drawings	HVAC	Slab	
Asbestos	Eastern States Steel	Index	Slurry wall	
Base plate	Egress	Inspection	Smoke control	
Beams	Elevator	Insulation	Smoke test	
Bid documents	Elevator Shaft	Job number	Spandrel beam	
Bid Invitation	Emergency communications	Joist	Specifications	
Bow tie	Equipment	L-50	Splices	
Bracing	Erection marks	Lighting	Sprinkler	
Bridging truss	Errors & Omissions	Loads	Stability	
Building code	Escalator	Maintenance	Stairways	
Calculations	Expansion joint	Marking	Standards	
Carpet	Exterior columns	Mesh reinforcement	Steel	
Ceilings	Fabrication	Mill inspection	Steel composition	
Certification	Family member	Model	Stiffness	
Chillers	Field survey	Mullion	Structural review	
Cladding	Fire alarms	Operations	Surveillance	
Collapse	Fireproofing	Paint	Survey	
Columns	Fire spread	Partition layout	Survivor	
Communication systems	Fire testing	Partitions	Tenant list	
Composite truss	Firetower	Photos	Tenant occupancy	
Computer output	Flag Pole	Pipes	Testing	
Computer program	Flammability	Plumbing	Tie	
Concrete	Floor	Prestressing	Tolerances	
Connections	Floor load	Probability, uncertainty	Transfer Girders	
Construction	Floor slab	Quality control	Triad	
Contract	Floor system	Ramp	Truss	
Core beams	Floor trusses	Reinforcing (strengthening)	Vestibule	
Core columns	Formwork	Renovation	Vibration	
Corrosion	Foundations	Repair	Walls	
Cracking	Fracture	Research & Development	Water supply	
			Weather	

BOOK 7

FLOOR TRUSSES

CHAPTERS 1 THRU 5

WTCI-1057-LERA

SKILLING, HELLE, CHRISTIANSEN, ROBERTSON — Structural & Civil Engineers

PROJECT THE WORLD TRADE CENTER | TITLE FLOOR TRUSSES-INDEX & GENERAL NOTES | DATE 10-20-67

REVISIONS

1-3-68
1-26-68
2-15-68
4-1-68
1-3-69
1-6-69
2-3-69
3-3-69
4-1-69
Printed 5-1-69

7-AB1- 1 Floor Trusses Index & General Notes
7-AB1- 2 Floor Truss 32T1
7-AB1- 3 Floor Truss 32T2
7-AB1- 4 Floor Truss 32T7
7-AB1- 5 Floor Truss 32T8
7-AB1- 6 Floor Truss 32T3
7-AB1- 7 Floor Truss 32T9
7-AB1- 8 Floor Truss 32T10
7-AB1- 9 Floor Truss 32T11
7-AB1-10 Floor Truss 32T4
7-AB1-11 Floor Truss 32T5 & 32T12
7-AB1-12 Floor Truss 32T13, 32T6
7-AB1-13 Floor Truss 32T14
7-AB1-14 Floor Truss 32T15
7-AB1-15 Floor Truss 32T16
7-AB1-16 Floor Truss 32T17
7-AB1-17 Floor Truss 32T18
7-AB1-18 Floor Truss 32T19
7-AB1-19 Floor Truss 32T20
7-AB1-20 Floor Truss 32T21
7-AB1-21 Floor Truss 32T22
7-AB1-22 Floor Truss 32T23, 32T24
7-AB1-23 Floor Truss 32T25, 32T26
7-AB1-24 Floor Truss 32T27
7-AB1-25 Floor Truss 32T28
7-AB1-26 Floor Truss 32T29
7-AB1-27 Floor Truss 32T30
7-AB1-28 Floor Truss 32T31
7-AB1-29 Floor Truss 32T32
7-AB1-30 Floor Truss 32T33
7-AB1-31 Floor Truss 32T34
7-AB1-32 Floor Truss 32T36
7-AB1-33 Floor Truss 32T37
7-AB1-34 Floor Truss 32T38
7-AB1-35 Floor Truss 32T39
7-AB1-36 Floor Truss 32T40
7-AB1-44 Floor Truss 32T49
7-AB1-45 Floor Truss 32T50
7-AB1-46 Floor Truss 32T51
7-AB1-47 Floor Truss 32T52
7-AB1-48 Floor Truss 32T53, 32T35
7-AB1-52 Typical Details
7-AB1-53 Typical Details
7-AB1-54 Floor Trusses - Cambers
7-AB1-55 Floor Trusses - Section A-A & B-B

LICENSED PROFESSIONAL ENGINEER
LESLIE E. ROBERTSON
No. 34360
UNIVERSITY OF THE STATE OF NEW YORK

DESIGNED
DRAWN
REVIEWED

GENERAL NOTES:

1. All material, including detail material not shown on these drawings to be Fy = 50 unless otherwise noted.

2. All floor truss angles have short legs vertical.

3. Horizontal shear forces between truss panel points and the composite concrete slab are indicated [ ] in the truss elevations. Where no shear force is given, the connection shall be proportioned for a force of 7 Kips [7]. See Drawing 7-AB2-1 for additional notes for additional shear forces at trusses C32 and 24T.

4. Shear transfer connections and devices shall be proportioned for the indicated horizontal shear force [ ] acting simultaneously with the horizontal shear force requirements indicated in the drawings for 24T trusses. Such connections and devices shall be proportioned for shear forces from C32 & 24T trusses of both positive sign and of negative sign.

5. Contractor shall supply representative calculations and/or test results for each connection proportioned by the Contractor. All connections, details and the like are subject to approval by the Engineer.

6. End reactions of each truss are indicated in truss elevations as "R = ". Where no force is given, end connections shall be proportioned for a minimum reaction of 9 Kips (R = 9).

7. Truss shear, indicating minimum requirements for each truss web member, is tabulated across the bottom of the truss elevations. Where no shear is given, web members and their connections shall be proportioned for a minimum shear of 4.5 Kips.

8. All 32T trusses shall be cambered to a parabolic camber symmetrical about mid-span. Camber diagrams indicate required camber at mid-span.

9. Chord stresses are indicated in truss elevations as "P = ". Where no force is given each truss chord splice connection shall be proportioned for a minimum force of 23 Kips (P = 23).

Vertical shear forces between adjacent panels are indicated in truss elevations as "V = ". Where no force is given, shear transfer connection shall be proportioned for a minimum force of 5 Kips (V = 5). Connections shall be proportioned for a shear force of both positive sign and negative sign.

SKILLING - HELLE - CHRISTIANSEN - ROBERTSON Structural & Civil Engineers

PROJECT THE WORLD TRADE CENTER | TITLE FLOOR TRUSS C 32 T1 | DATE 10-20-67

REVISIONS

1-3-68
1-26-68
2-15-68
7-22-68

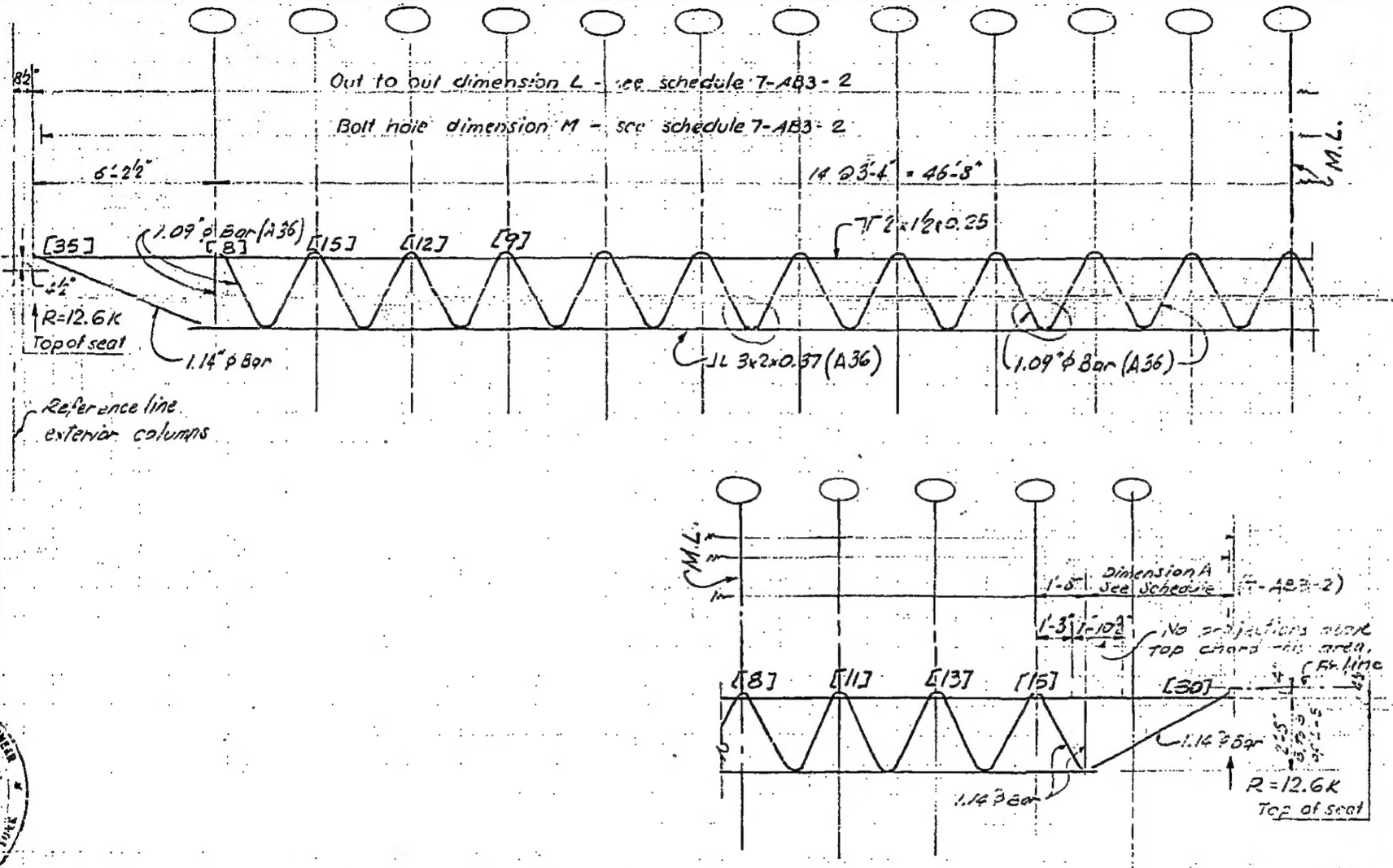

Elevation C32T1

LICENSED PROFESSIONAL ENGINEER LESLIE E. ROBERTSON No. 34360 STATE OF NEW YORK

7-AB1-2

SKILLING - HELLE - CHRISTIANSEN - ROBERTSON Structural & Civil Engineers

PROJECT THE WORLD TRADE CENTER | TITLE FLOOR TRUSS C32T2 | DATE 1-3-68

REVISIONS

1-26-68
4-15-68
7-22-68

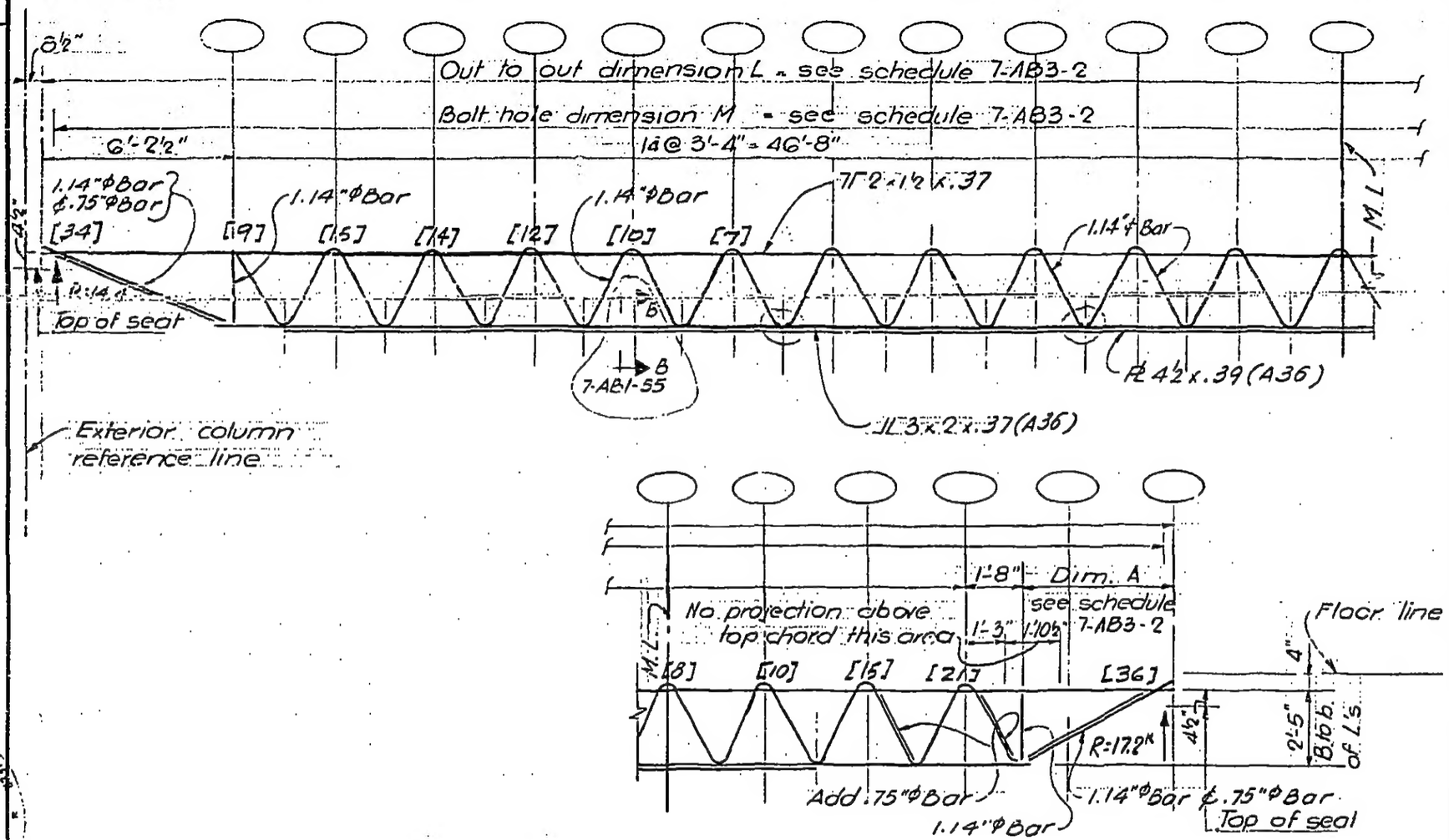

Elevation C32T2

LICENSED PROFESSIONAL ENGINEER
LESLIE E. ROBERTSON
No. 34360
OF THE STATE OF NEW YORK

7-AB1-3

SKILLING - HELLE - CHRISTIANSEN - ROBERTSON Structural & Civil Engineers

PROJECT THE WORLD TRADE CENTER | TITLE FLOOR TRUSS C32T7. | DATE 1-3-68

REVISIONS

1-26-68
4-1-68
4-15-68
7-22-68

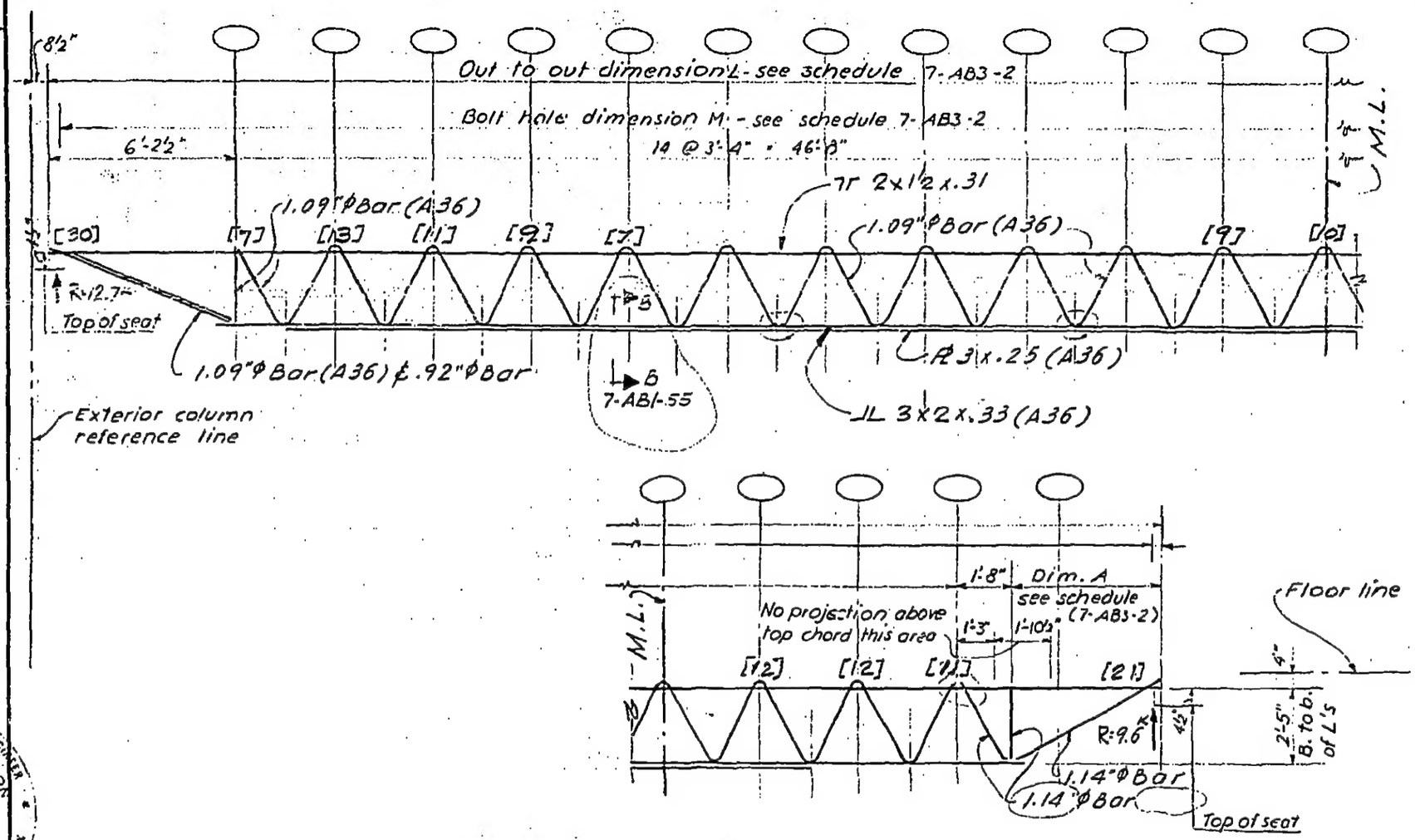

Elevation C32T.7.

LICENSED PROFESSIONAL ENGINEER LESLIE E. ROBERTSON No. 34360 OF THE STATE OF NEW YORK

7-AB1-4

4

SKILLING - HELLE - CHRISTIANSEN - ROBERTSON Structural & Civil Engineers

PROJECT THE WORLD TRADE CENTER | TITLE FLOOR TRUSS C32T8 | DATE 1-3-68

REVISIONS

1-26-68
4-1-68
4-15-68
7-22-68
10-15-68

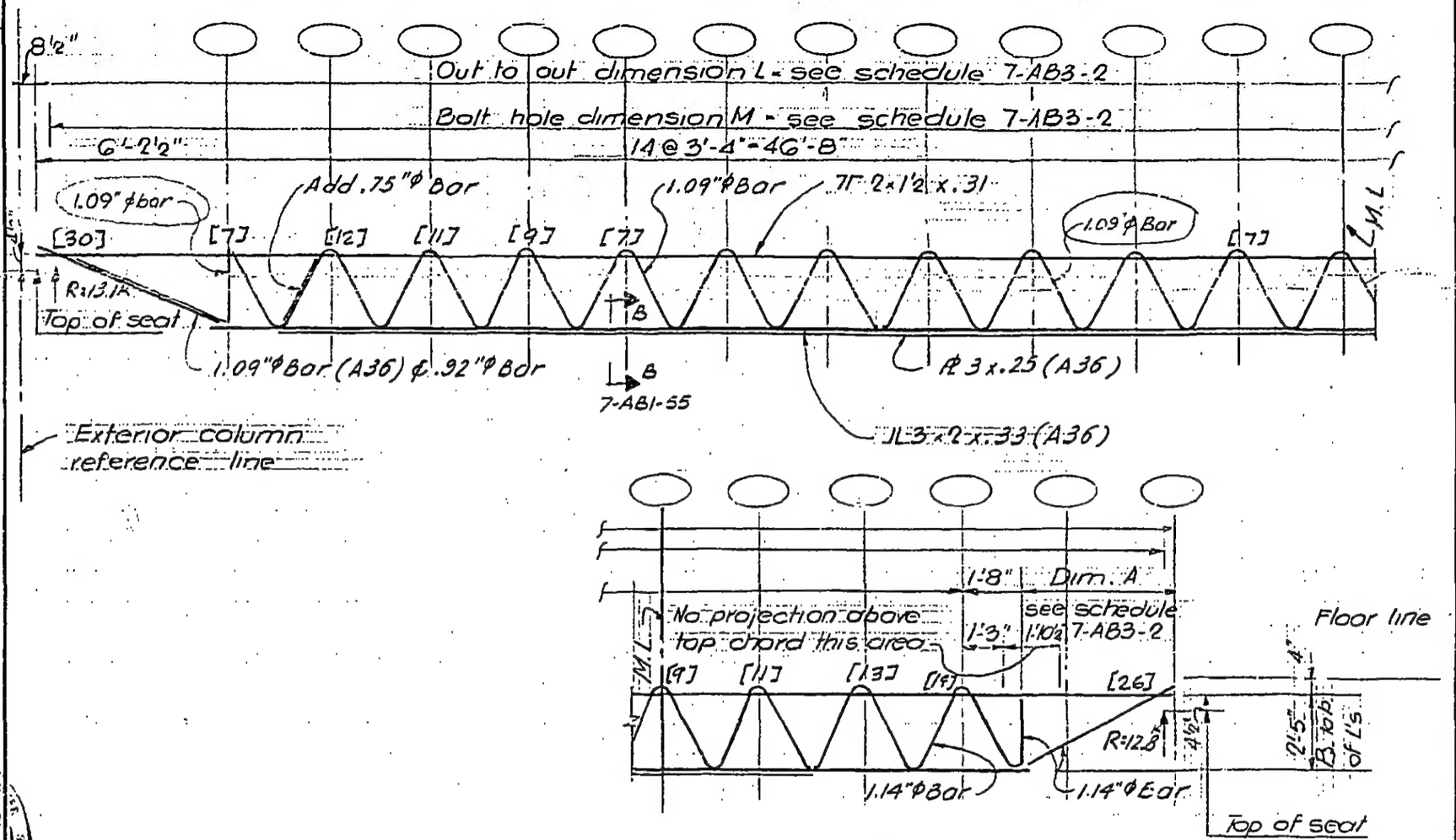

Elevation C32T8

LICENSED PROFESSIONAL ENGINEER LESLIE E. ROBERTSON NO. 14360 STATE OF NEW YORK

7-AB1-5

5

SKILLING - HELLE - CHRISTIANSEN - ROBERTSON Structural & Civil Enginoors

PROJECT THE WORLD TRADE CENTER | TITLE FLOOR TRUSS C32T3 | DATE 1-3-68

REVISIONS

1-26-68
4-15-68
5-10-68
7-22-68

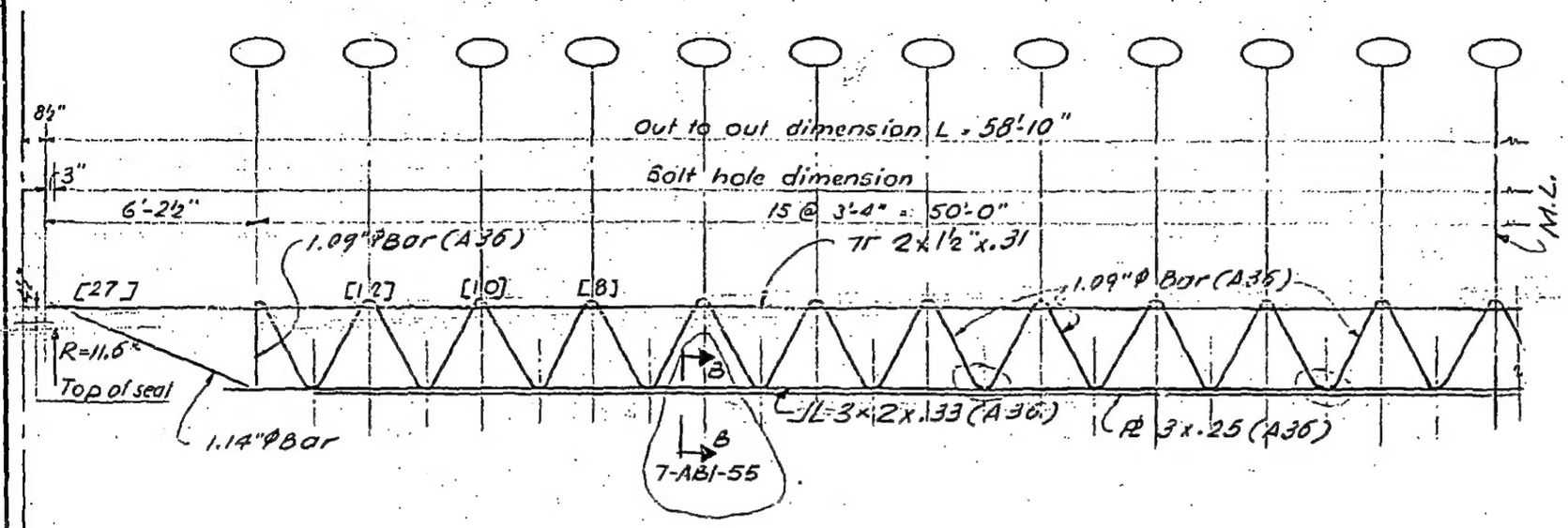

Exterior columns ref. line

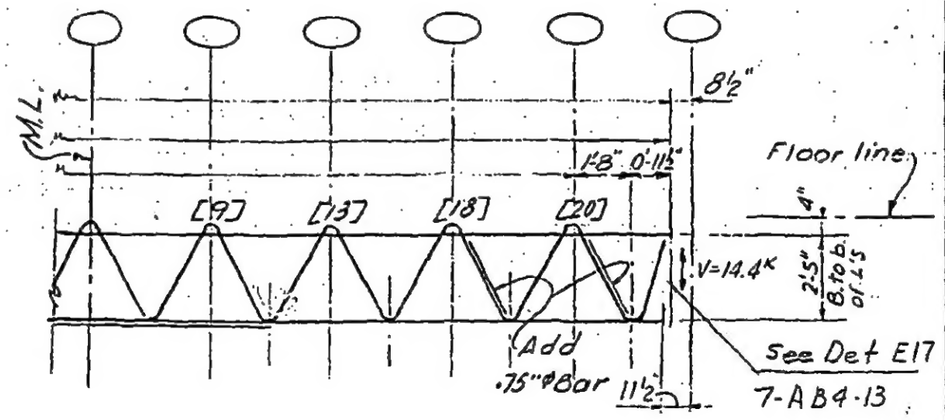

Elevation C32T3

LICENSED PROFESSIONAL ENGINEER
LESLIE E. ROBERTSON
No. 34360
UNIVERSITY OF THE STATE OF NEW YORK

7-AB1-6

SKILLING - HELLE - CHRISTIANSEN - ROBERTSON Structural & Civil Engineers

PROJECT THE WORLD TRADE CENTER | TITLE FLOOR TRUSS C.32 T.9. | DATE 1-3-68

REVISIONS

1-26-68
4-1-68
4-15-68
5-10-68
7-22-68

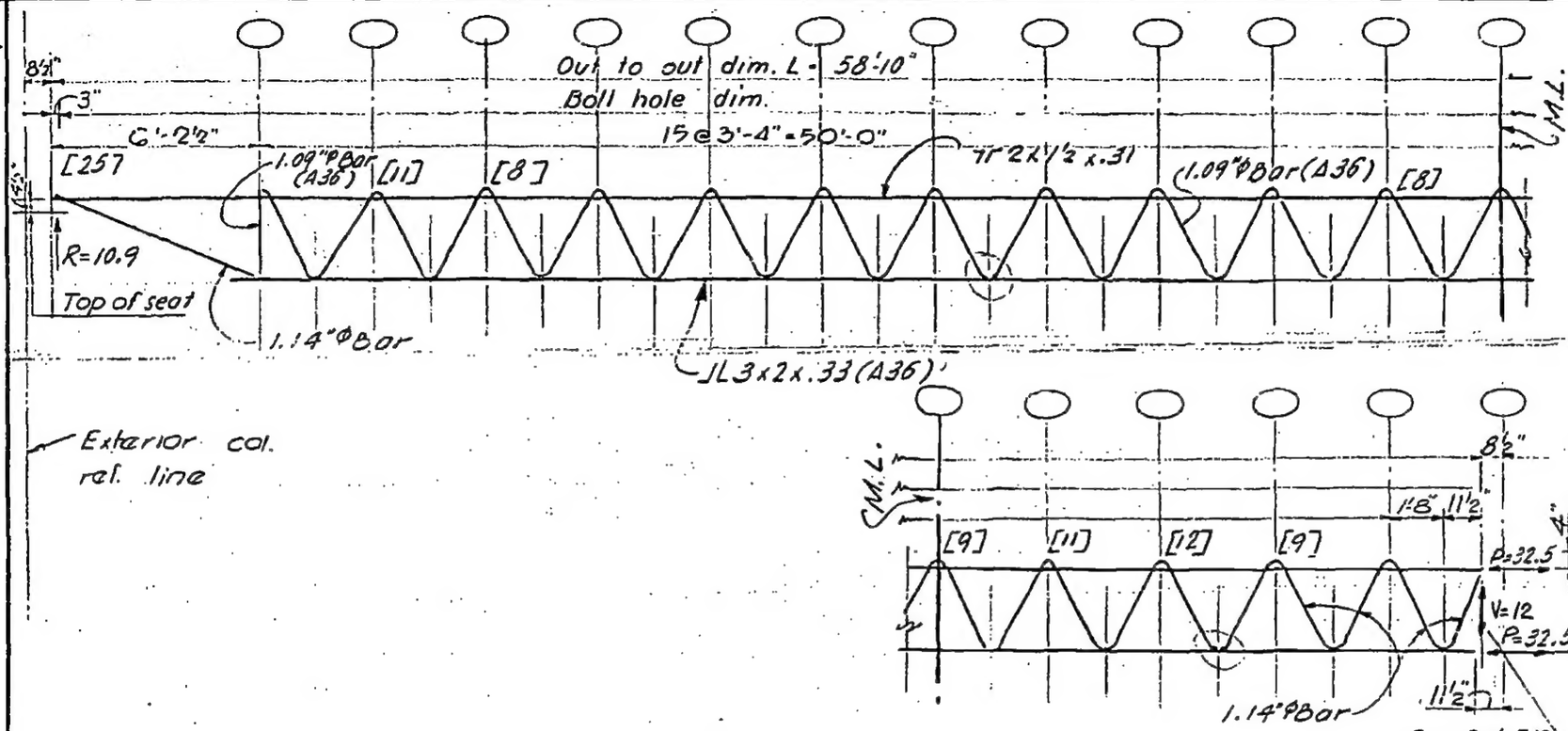

Elevation C32T9

LESLIE E. ROBERTSON LICENSED PROFESSIONAL ENGINEER No. 34360 UNIVERSITY OF THE STATE OF NEW YORK

7

T-AB1-7

SKILLING - HELLE - CHRISTIANSEN - ROBERTSON Structural & Civil Engineers

PROJECT THE WORLD TRADE CENTER | TITLE FLOOR TRUSS C 32 T 10 | DATE 1-26-68

REVISIONS

4-1-68
5-10-68
7-22-68

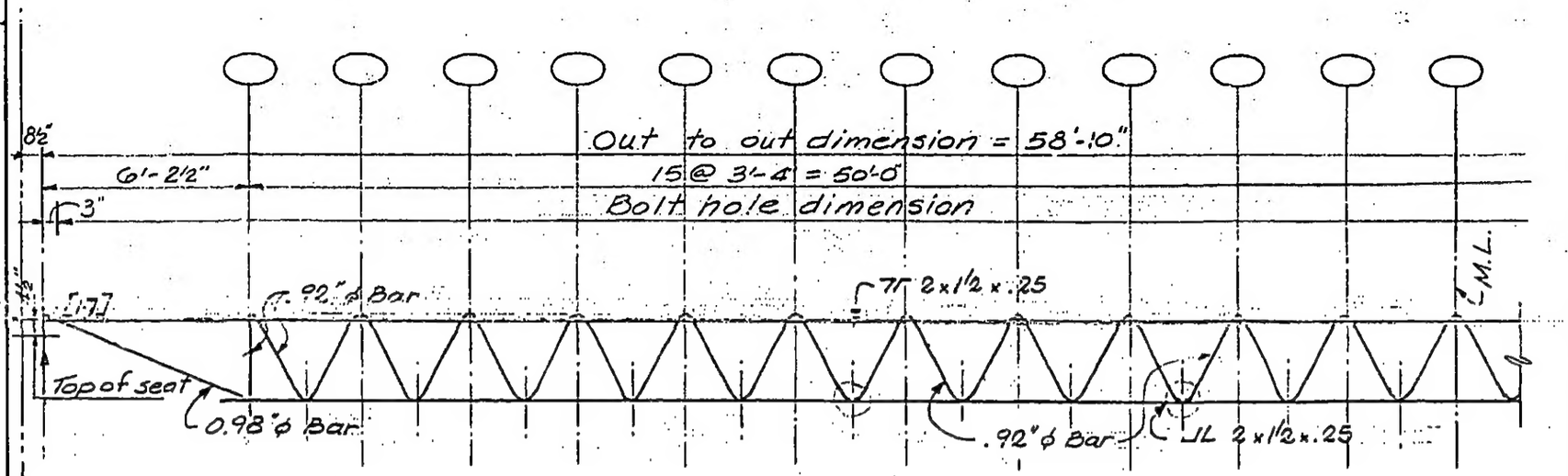

Exterior columns ref. line

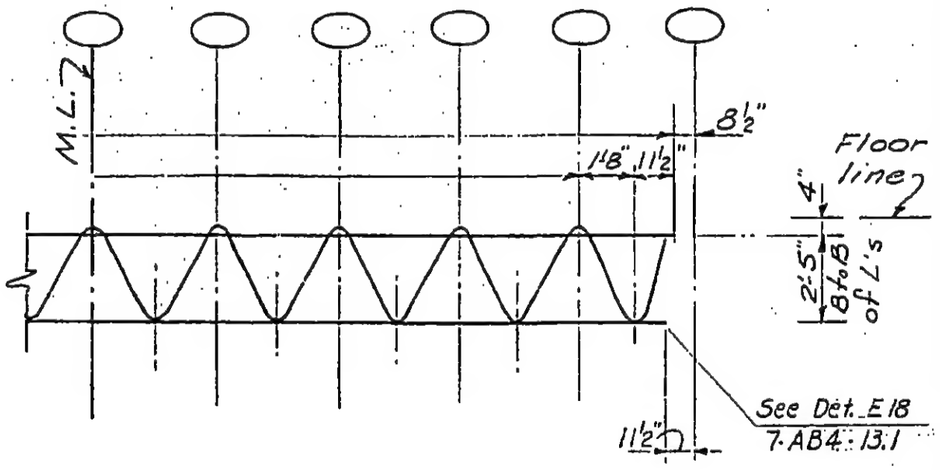

Elevation C32T10

LICENSED PROFESSIONAL ENGINEER
LESLIE E. ROBERTSON
No. 34360
UNIVERSITY OF THE STATE OF N.Y.

8

7-AB1-8

SKILLING - HELLE - CHRISTIANSEN - ROBERTSON Structural & Civil Engineers

PROJECT THE WORLD TRADE CENTER | TITLE FLOOR TRUSS C32T11 | DATE 1-26-68

REVISIONS

4-1-68
5-10-68
7-22-68

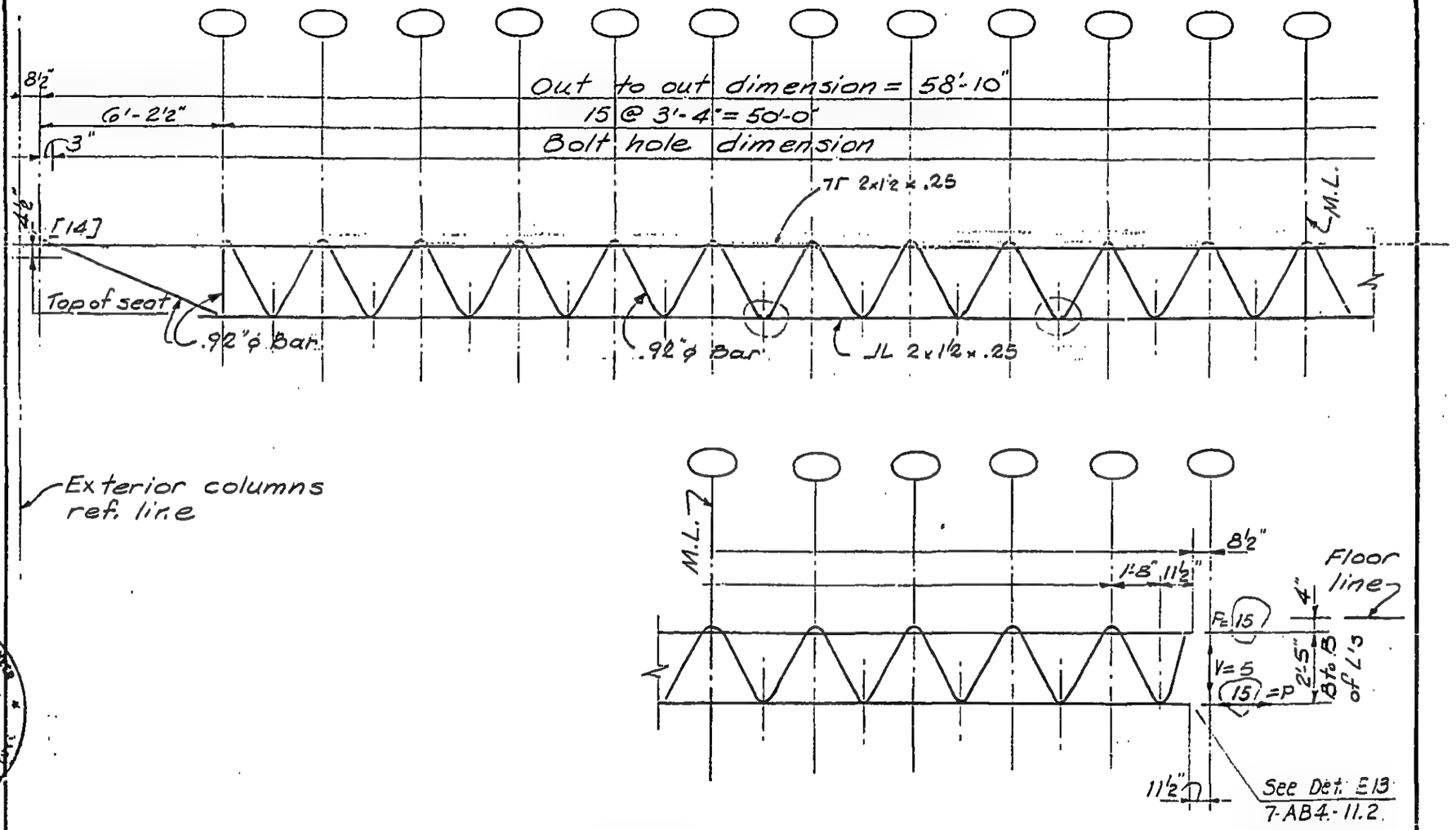

Elevation C32T11.

LICENSED PROFESSIONAL ENGINEER
LESLIE E. ROBERTSON
No. 34360
REGISTERED IN THE STATE OF NEW YORK

9

7-AB1-9

SKILLING - HELLE - CHRISTIANSEN - ROBERTSON Structural & Civil Engineers

PROJECT THE WORLD TRADE CENTER | TITLE FLOOR TRUSS - C32T4 | DATE 1-3-68

REVISIONS

1-26-68
4-1-68
5-10-68
7-22-68

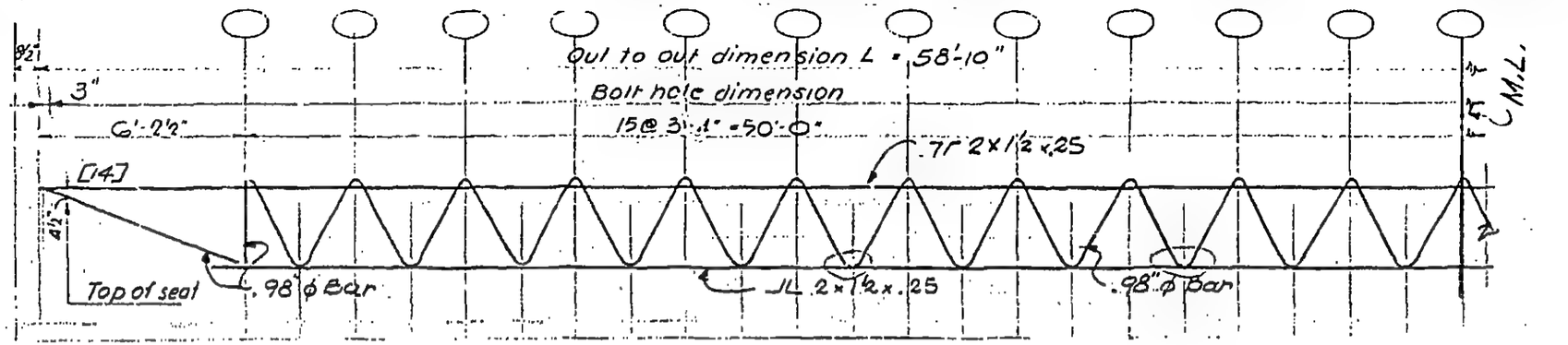

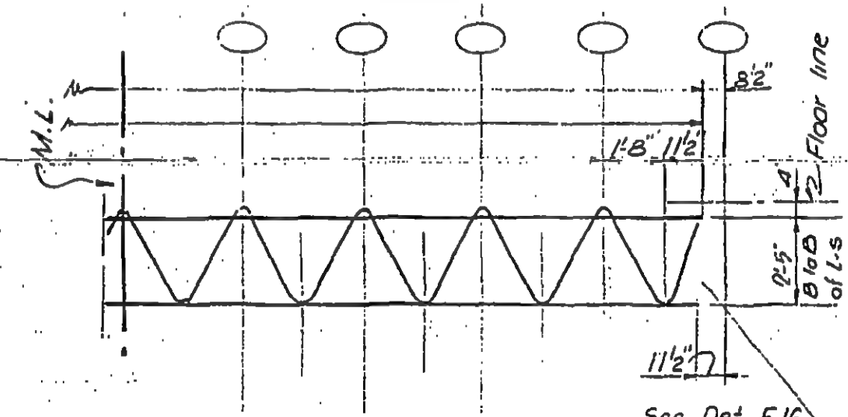

Elevation C32T4

LICENSED PROFESSIONAL ENGINEER
LESLIE E. ROBERTSON
No. 34360
REGISTERED IN THE STATE OF NEW YORK

7-AB1-10

SKILLING - HELLE - CHRISTIANSEN - ROBERTSON Structural & Civil Engineers

PROJECT THE WORLD TRADE CENTER | TITLE FLOOR TRUSS C32T5 & C32T12 | DATE 10-20-67

REVISIONS

1-3.68
1-26-68
2-15-68
4-1-68
7-22-68

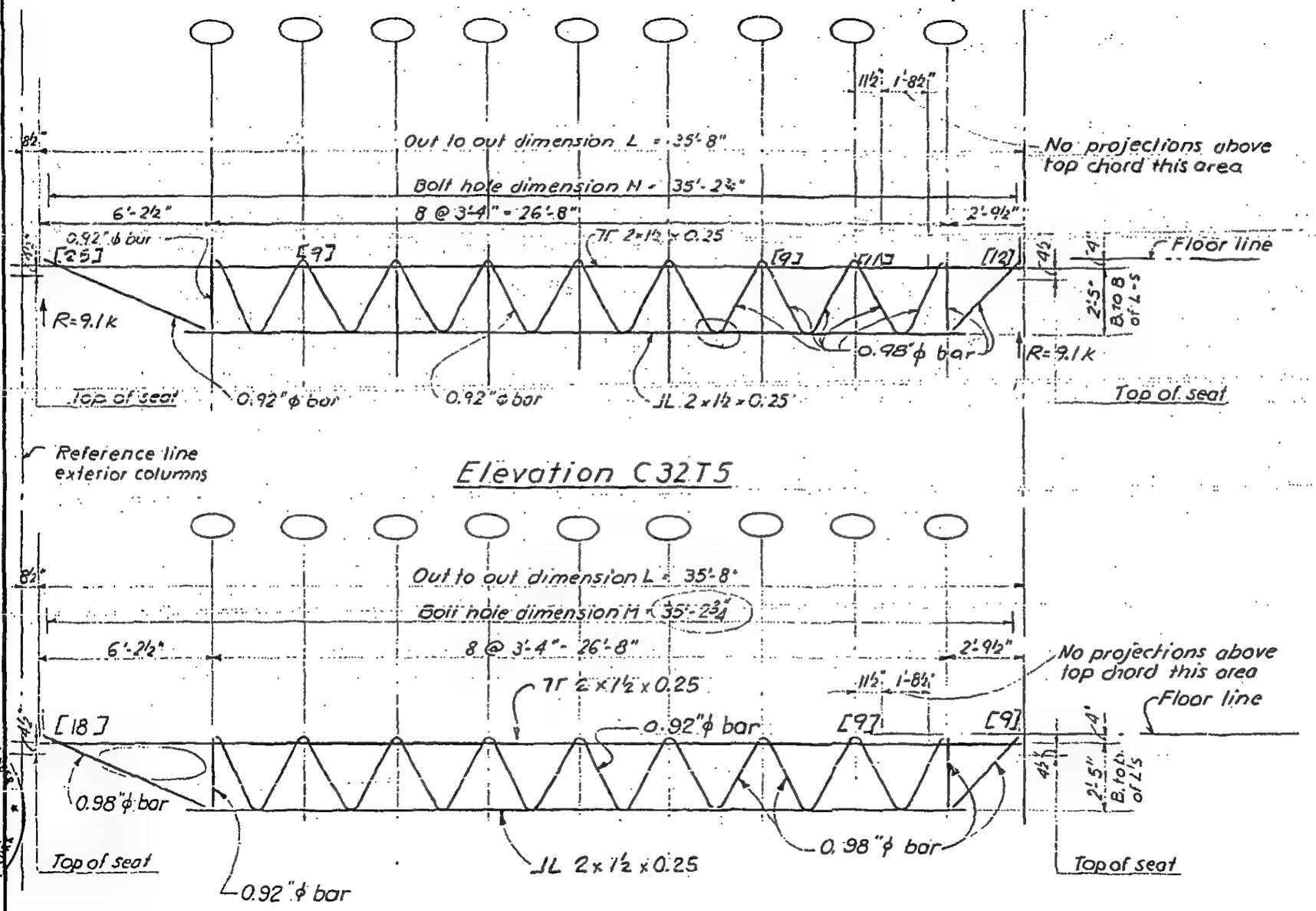

Elevation C32T5

Elevation C32T12

LICENSED PROFESSIONAL ENGINEER
LESLIE E. ROBERTSON
NO. 34360
REGISTERED BY THE STATE OF NEW YORK

7-AB1.-11

SKILLING - HELLE - CHRISTIANSEN - ROBERTSON Structural & Civil Engineers

PROJECT THE WORLD TRADE CENTER | TITLE FLOOR TRUSS C 32 T13 & T6 | DATE 1-3-68

REVISIONS

1-26-68
4-1-68
5-10-68
7-22-68

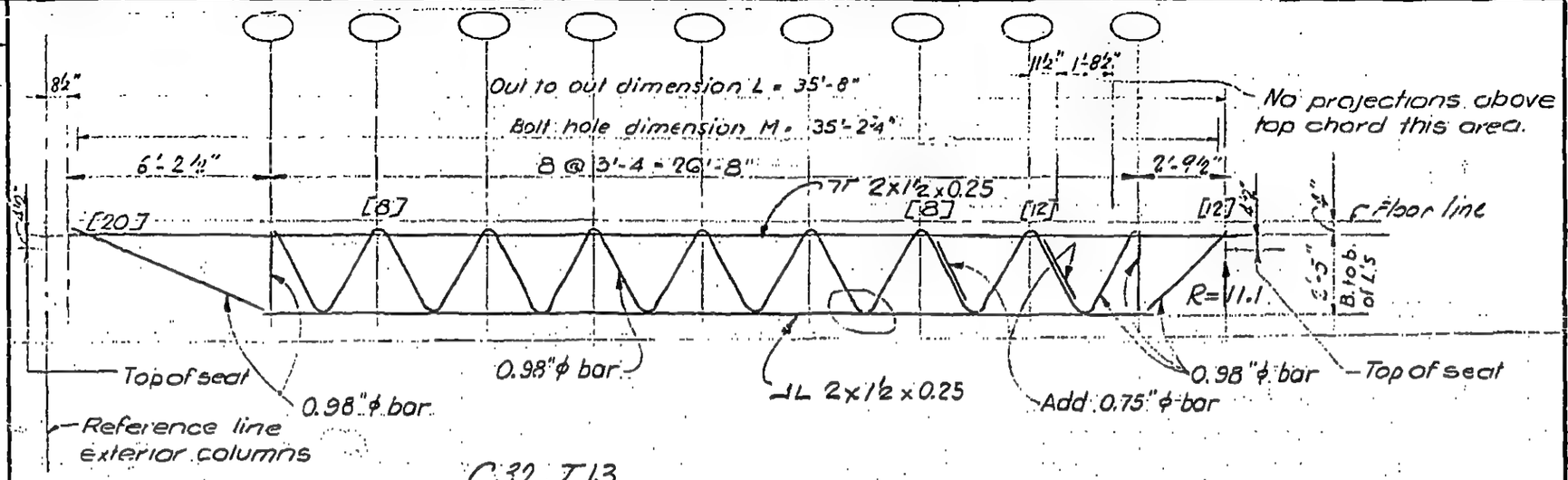

C32 T13

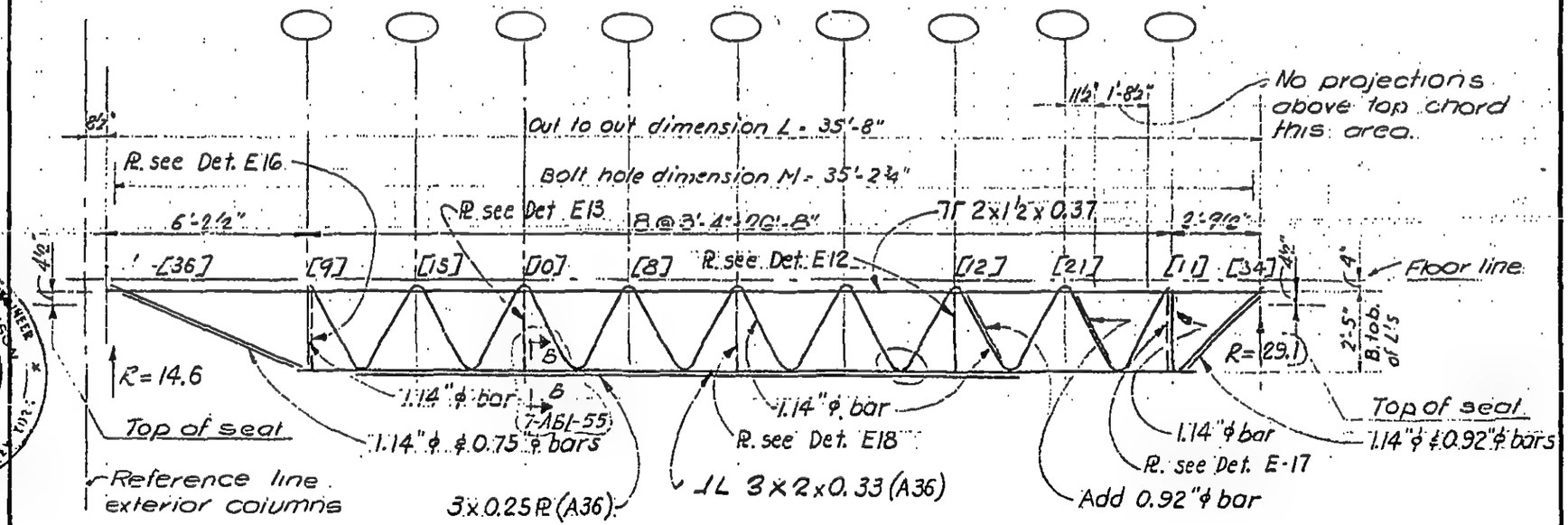

C32 T6

LICENSED PROFESSIONAL ENGINEER LESLIE E. ROBERTSON No. 34660 UNIVERSITY OF THE STATE OF NEW YORK

7-AB1-12

SKILLING - HELLE - CHRISTIANSEN - ROBERTSON Structural & Civil Engineers

PROJECT THE WORLD TRADE CENTER | TITLE FLOOR TRUSS C32 T14 | DATE 8-1-68

REVISIONS

8-15-68
10-4-68

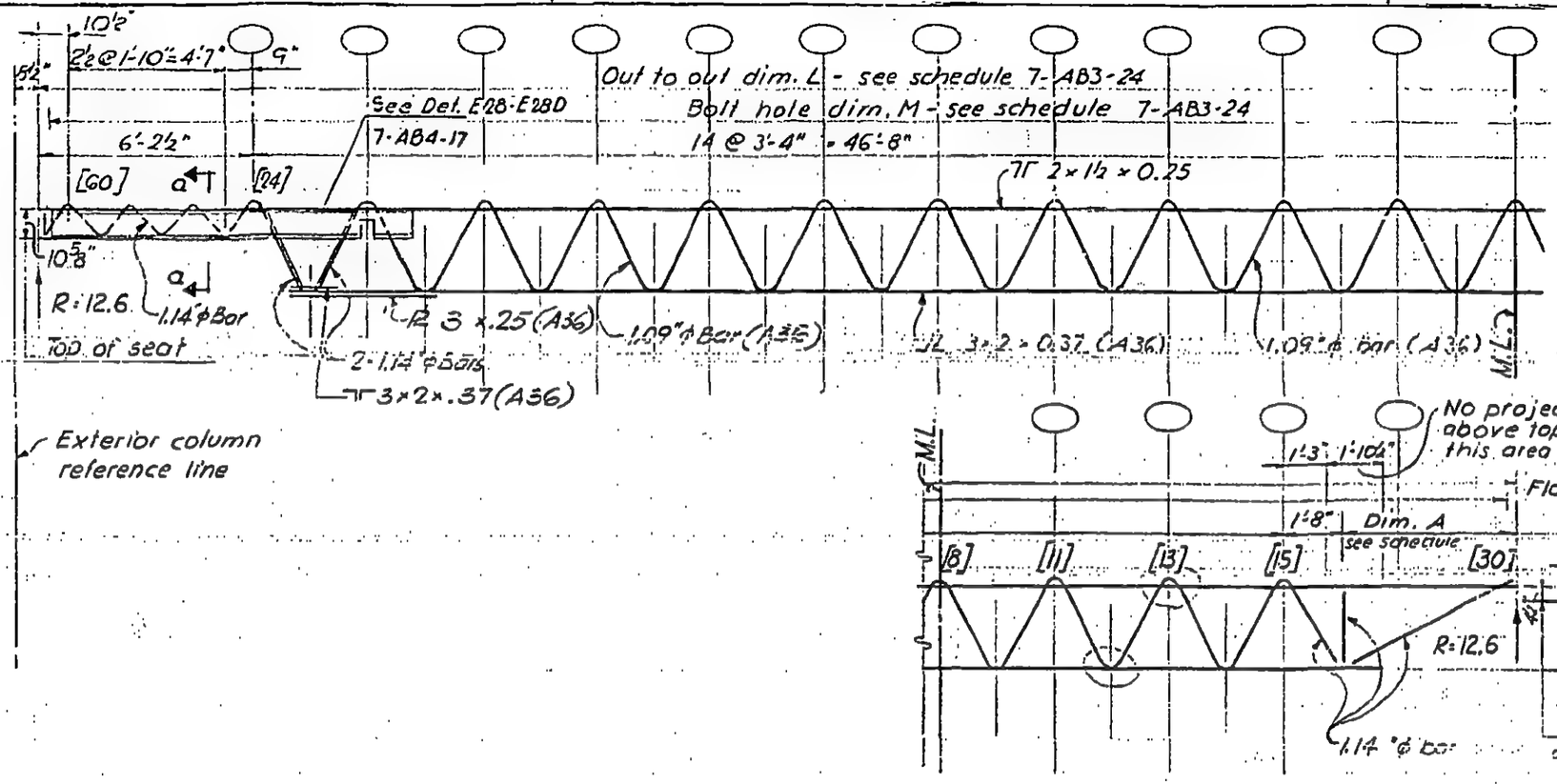

Elevation C32 T14

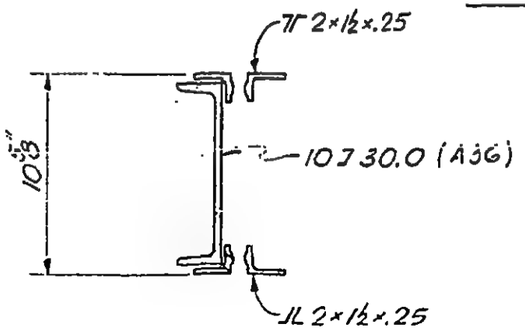

Section a-a

7-AB1-13

SKILLING - HELLE - CHRISTIANSEN - ROBERTSON Structural & Civil Engineers

PROJECT THE WORLD TRADE CENTER | TITLE FLOOR TRUSS C32 T15 | DATE 8-15-68

REVISIONS

10-4-68

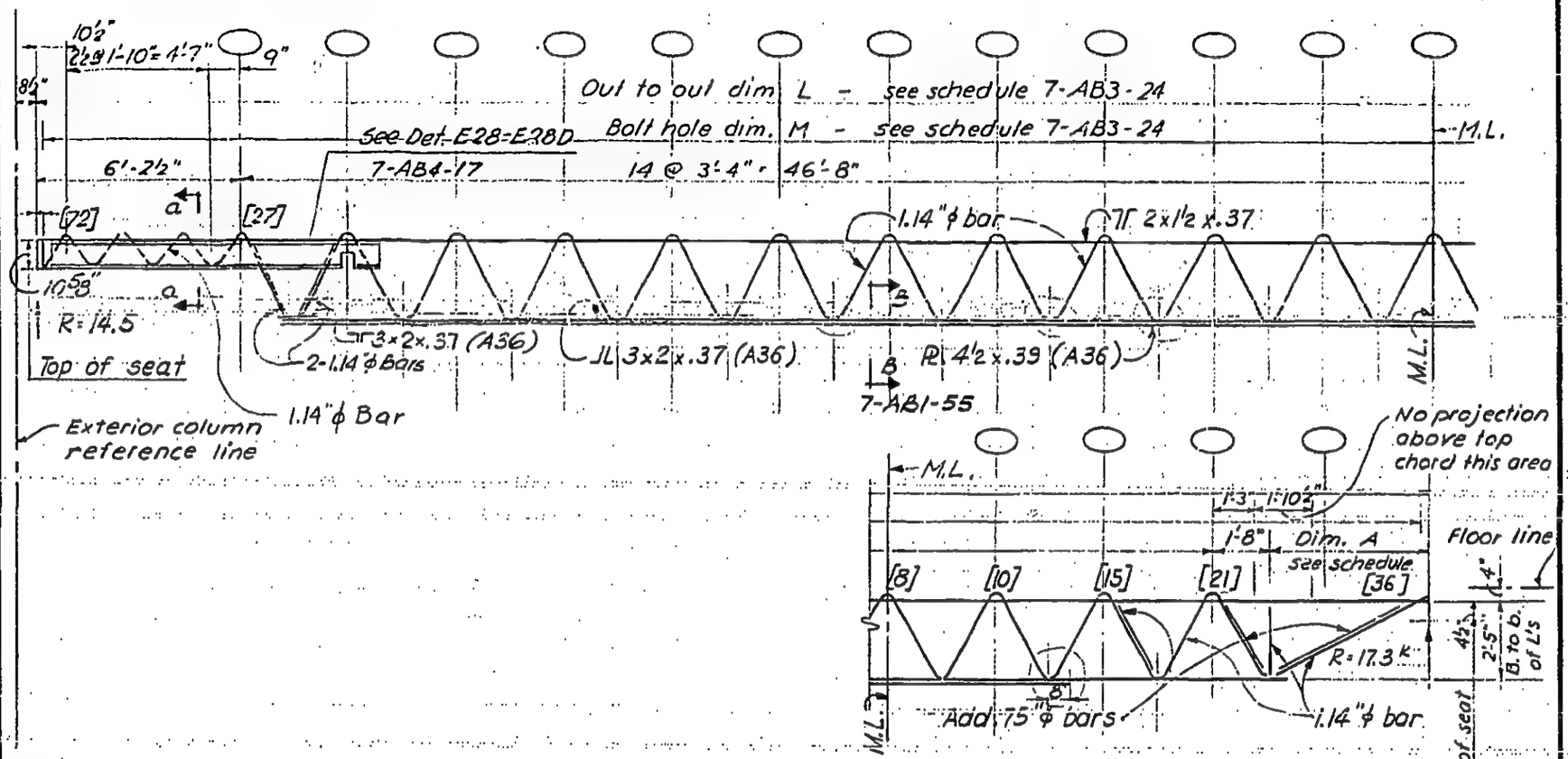

Elevation C32 T15

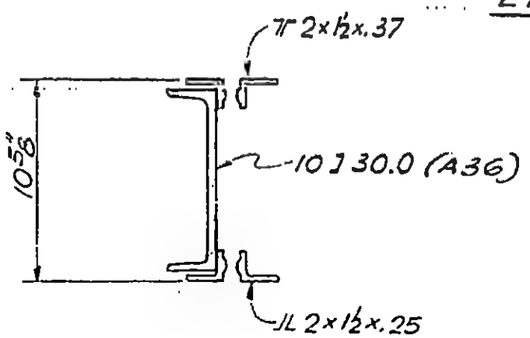

Section a-a

LICENSED PROFESSIONAL ENGINEER
LESLIE E. ROBERTSON
No. 34360
UNIVERSITY OF THE STATE OF NEW YORK

7-AB1-14

SKILLING - HELLE - CHRISTIANSEN - ROBERTSON Structural & Civil Engineers

PROJECT: THE WORLD TRADE CENTER | TITLE: FLOOR TRUSS C32T16 | DATE: 8-15-68

REVISIONS

10-4-68

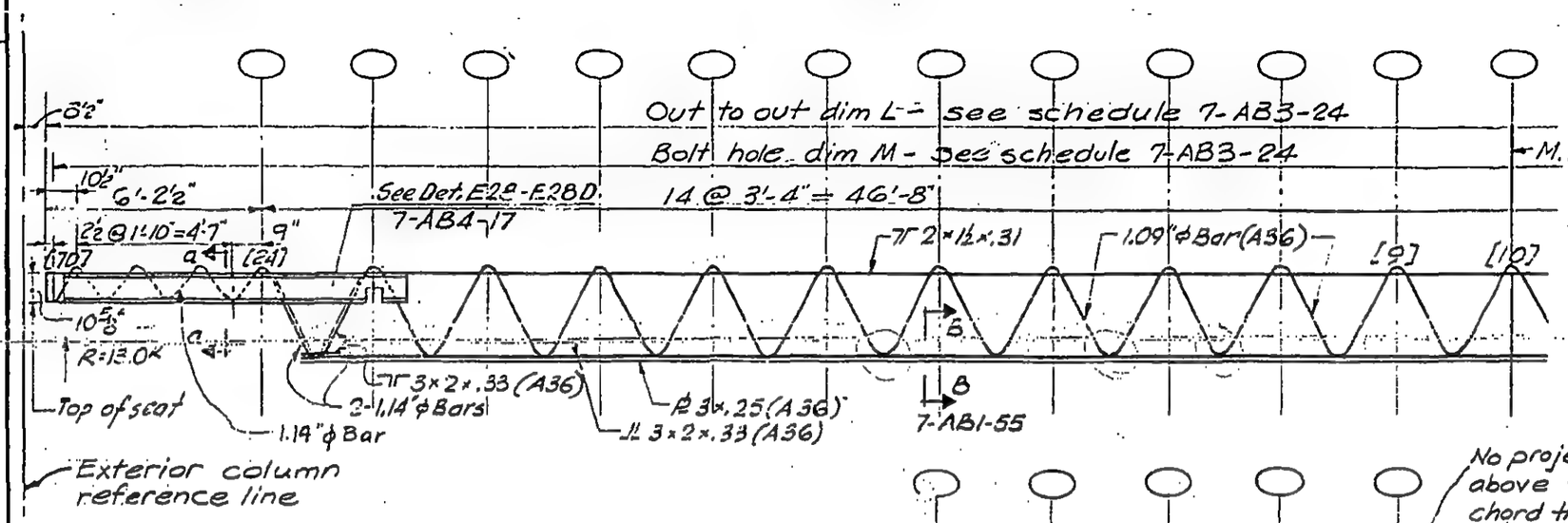

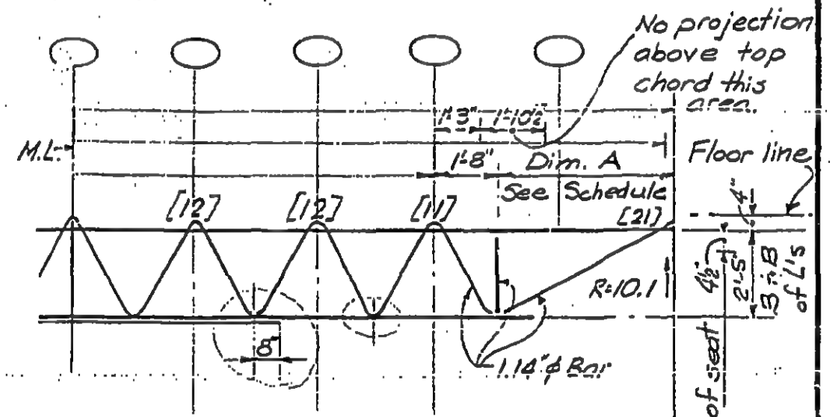

Elevation C32T16

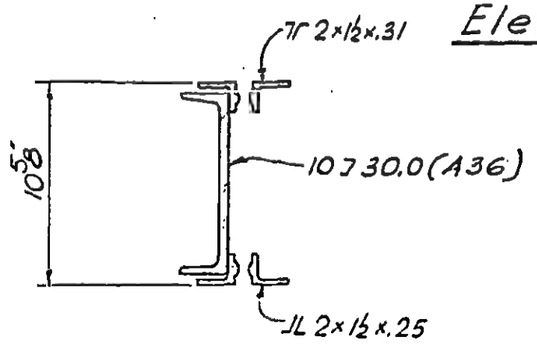

Section a-a

7-AB1-15

LICENSED PROFESSIONAL ENGINEER
LESLIE E. ROBERTSON
No. 34360
UNIVERSITY OF THE STATE OF NEW YORK

SKILLING - HELLE - CHRISTIANSEN - ROBERTSON Structural & Civil Engineers

PROJECT THE WORLD TRADE CENTER | TITLE FLOOR TRUSS C32 T17 | DATE 8-15-68

REVISIONS

10-4-68

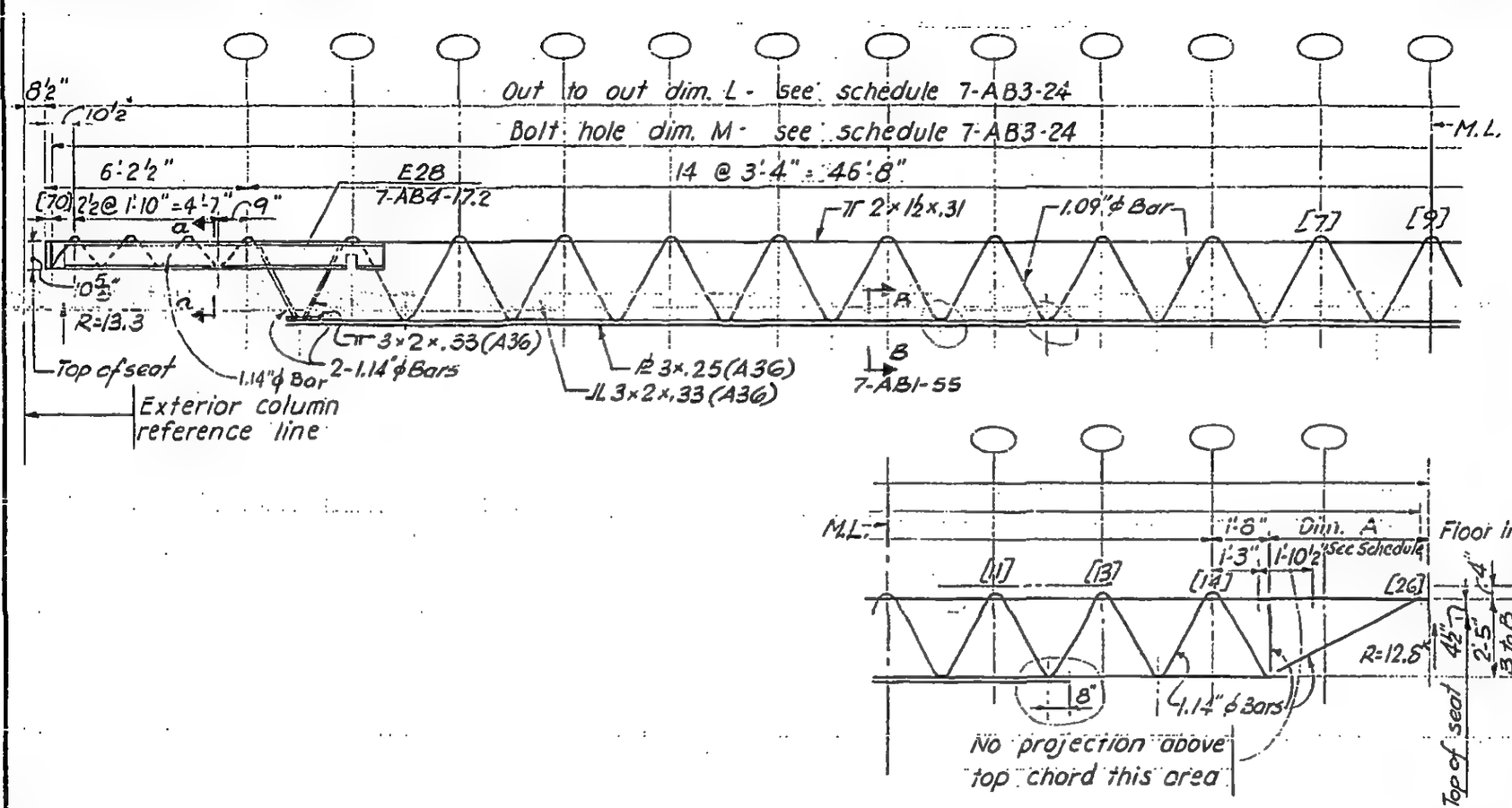

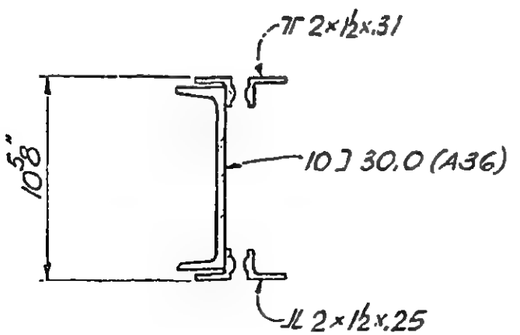

Section a-a

Elevation C32 T17

7-AB1-16

SKILLING - HELLE - CHRISTIANSEN - ROBERTSON Structural & Civil Engineers

PROJECT THE WORLD TRADE CENTER | TITLE FLOOR TRUSS C.32 T18 | DATE 8-15-68

REVISIONS

10-4-68

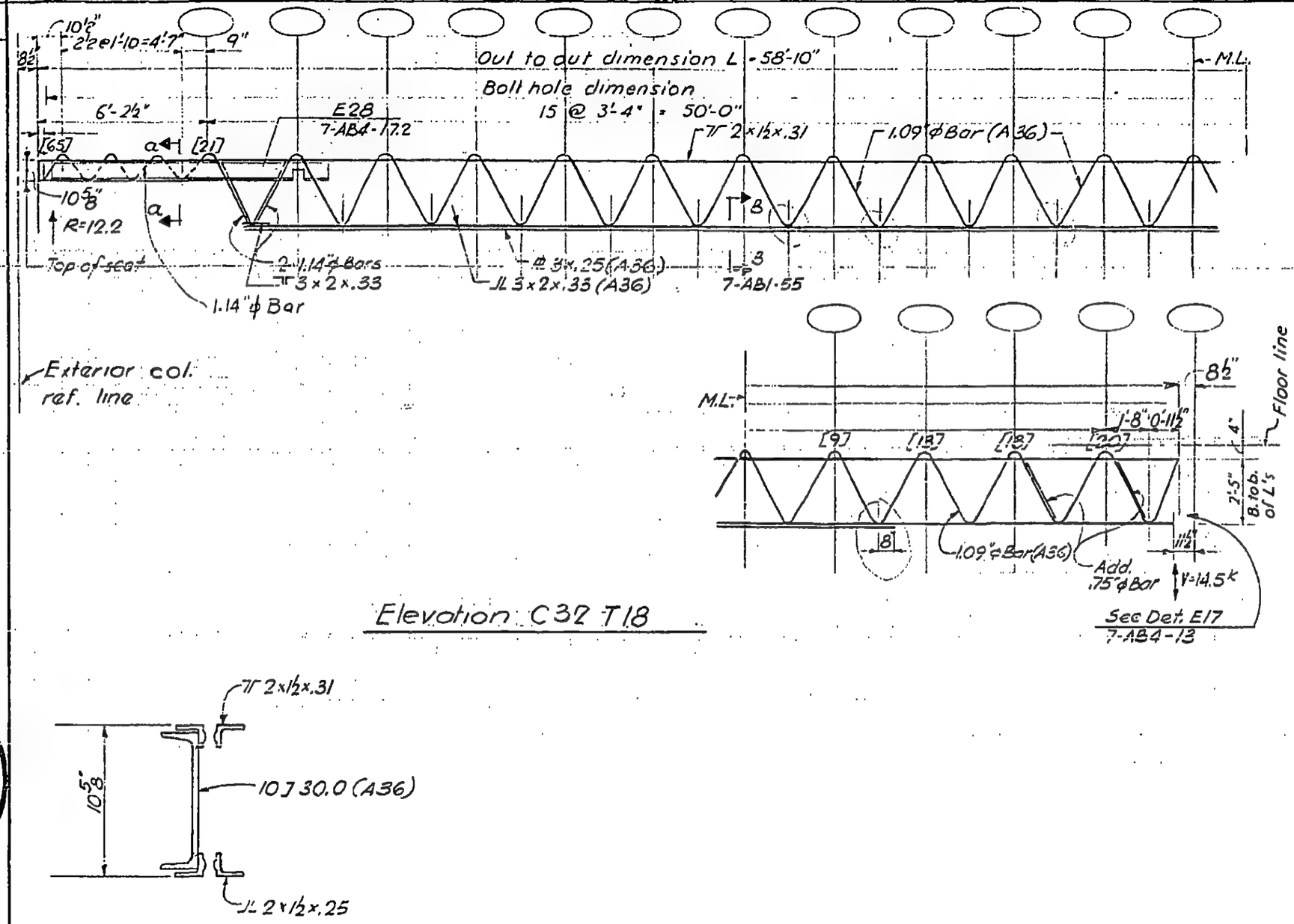

Elevation C32 T18

Section a-a

LICENSED PROFESSIONAL ENGINEER
LESLIE E. ROBERTSON
No. 34360
UNIVERSITY OF THE STATE OF NEW YORK

7-AB1-17

SKILLING - HELLE - CHRISTIANSEN - ROBERTSON Structural & Civil Engineers

PROJECT	TITLE	DATE
THE WORLD TRADE CENTER	FLOOR TRUSS C32 T19	8-15-68

REVISIONS

10-4-68

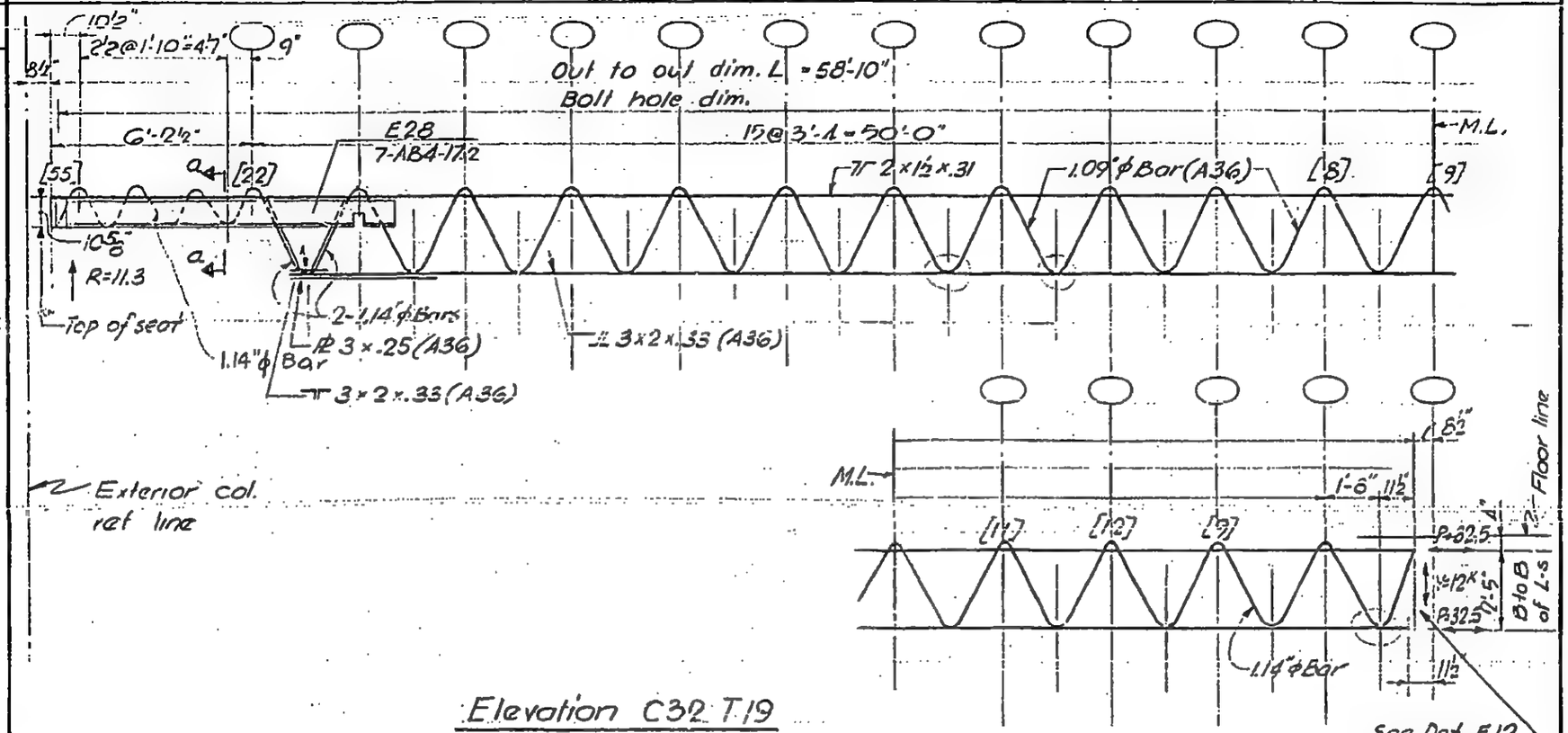

Elevation C32 T19

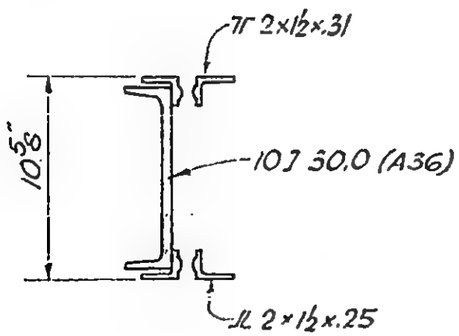

Section a-a

LICENSED PROFESSIONAL ENGINEER
LESLIE E. ROBERTSON
No. 34360
UNIVERSITY OF THE STATE OF NEW YORK

7-AB1-18

SKILLING - HELLE - CHRISTIANSEN - ROBERTSON Structural & Civil Engineers

PROJECT THE WORLD TRADE CENTER | TITLE FLOOR TRUSS C32 T20 | DATE 8-15-68

REVISIONS

10-4-68

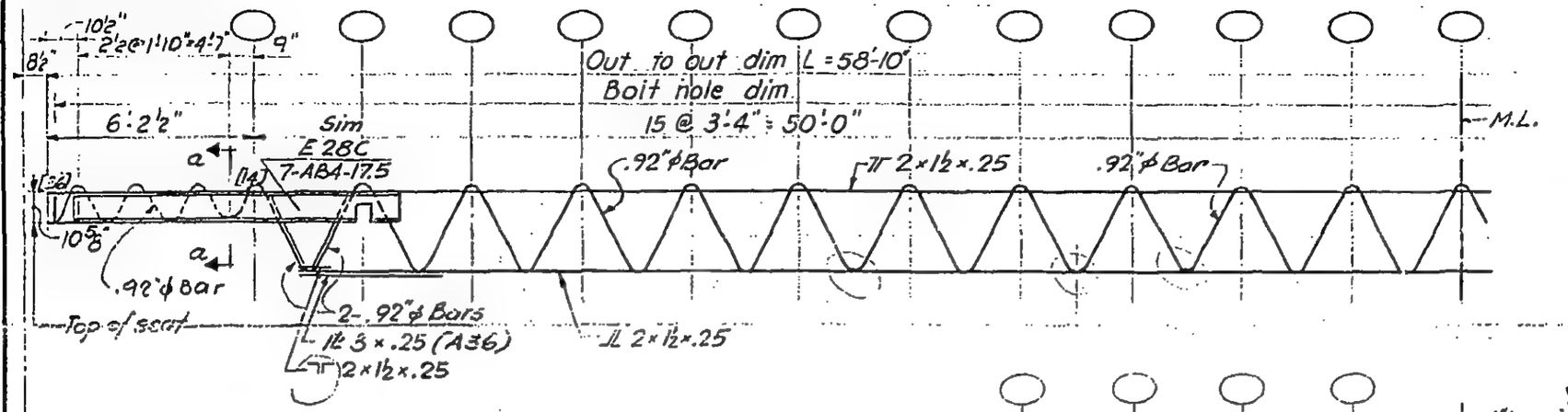

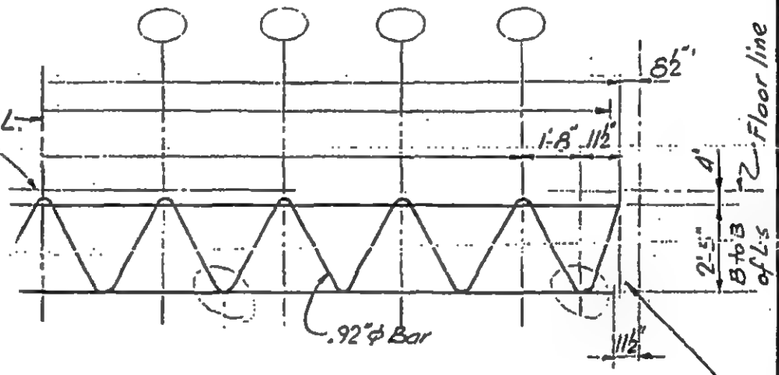

Elevation C32 T20

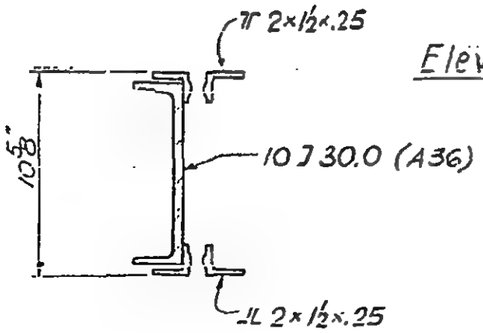

Section a-a

LICENSED PROFESSIONAL ENGINEER
LESLIE E. ROBERTSON
No. 34360
UNIVERSITY OF THE STATE OF NEW YORK

7-AB1-19

SKILLING - HELLE - CHRISTIANSEN - ROBERTSON Structural & Civil Engineers

PROJECT THE WORLD TRADE CENTER | TITLE FLOOR TRUSS C32 T21 | DATE 8-15-68

REVISIONS

10-4-68

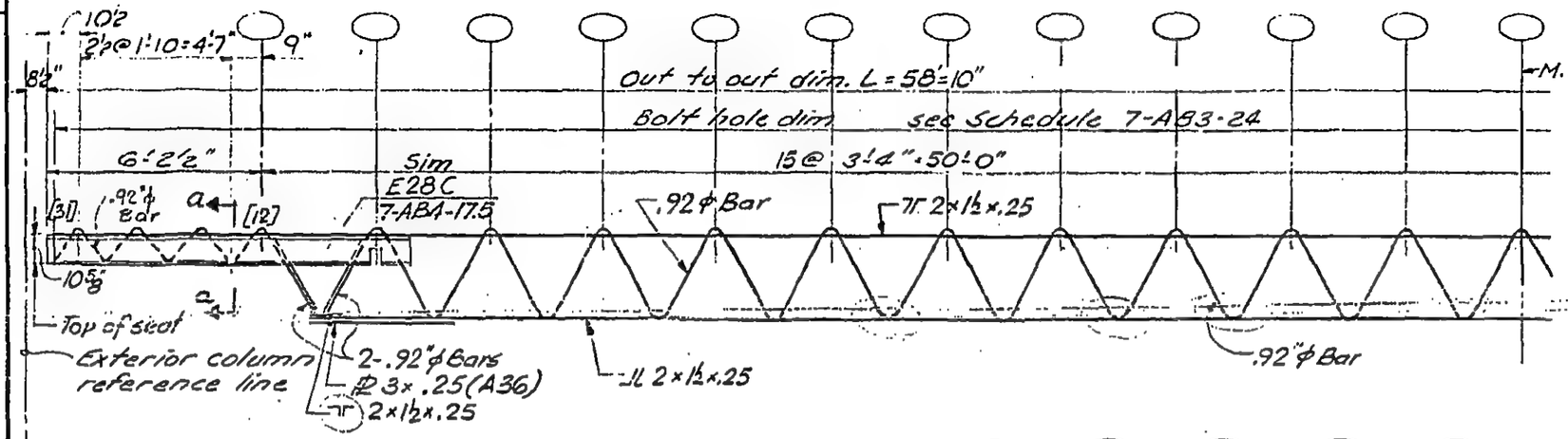

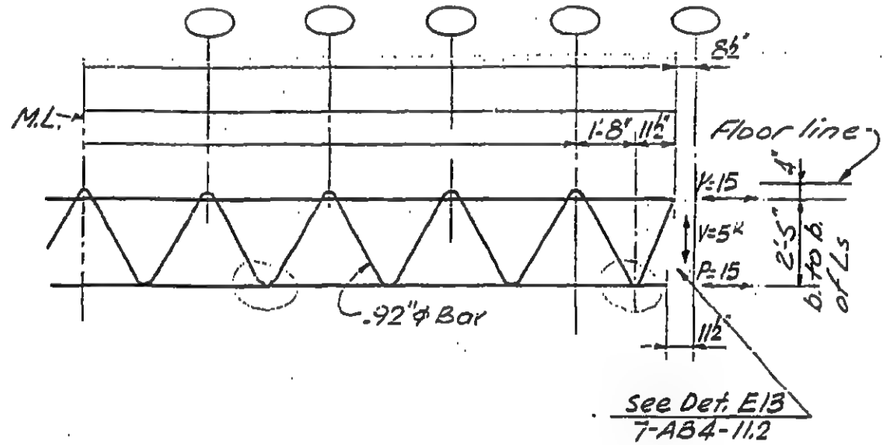

ELEVATION C32 T21

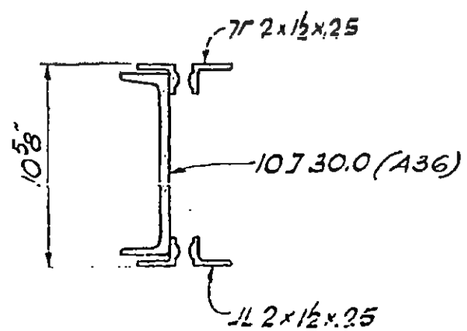

Section a-a

LICENSED PROFESSIONAL ENGINEER
LESLIE E. ROBERTSON
No. 34360
UNIVERSITY OF THE STATE OF NEW YORK

7-AB1-20

SKILLING - HELLE - CHRISTIANSEN - ROBERTSON Structural & Civil Engineers

PROJECT THE WORLD TRADE CENTER | TITLE FLOOR TRUSS C32_T22 | DATE 8-15-68

REVISIONS

10-4-68

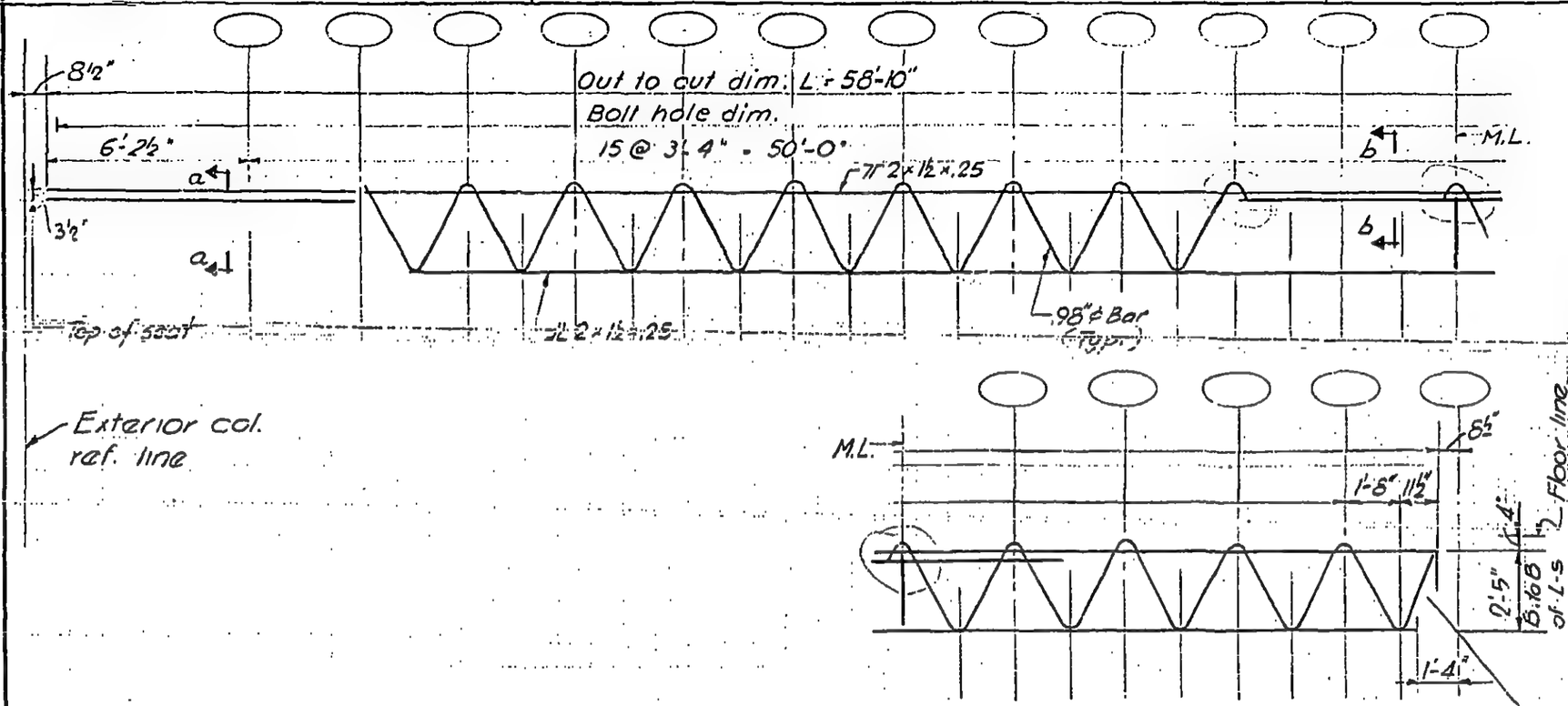

Elevation C32 T22

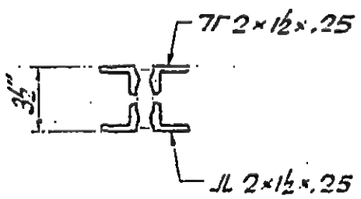

Section a-a

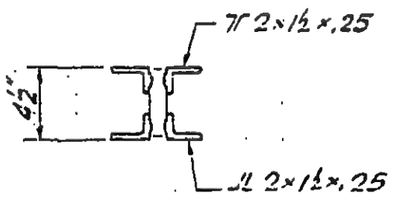

Section b-b

LICENSED PROFESSIONAL ENGINEER LESLIE E. ROBERTSON No. 34360 UNIVERSITY OF THE STATE OF NEW YORK

7-AB1-21

SKILLING - HELLE - CHRISTIANSEN - ROBERTSON Structural & Civil Engineers

PROJECT THE WORLD TRADE CENTER | TITLE FLOOR TRUSS C 32 T 23 & C 32 T 24 | DATE 8-1-68

REVISIONS

8-15-68
10-4-68

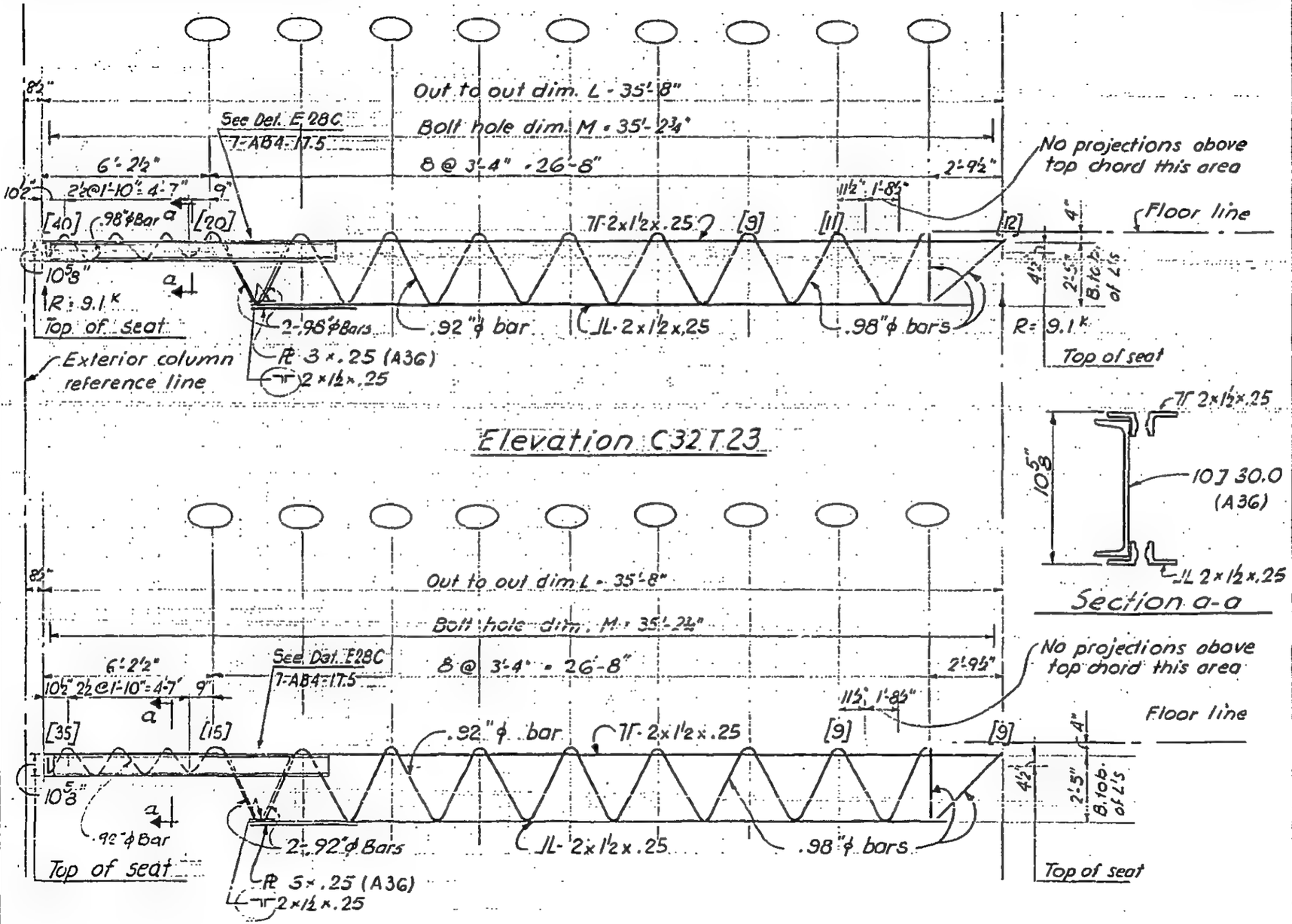

Elevation C32T23

Section a-a

Elevation C32T24

7-AB1-22

LICENSED PROFESSIONAL ENGINEER
LESLIE E. ROBERTSON JR.
UNIVERSITY OF

SKILLING - HELLE - CHRISTIANSEN - ROBERTSON Structural & Civil Engineers

PROJECT THE WORLD TRADE CENTER | TITLE FLOOR TRUSS C32 T25 & C32 T26 | DATE 8-15-68

REVISIONS

10-4-68

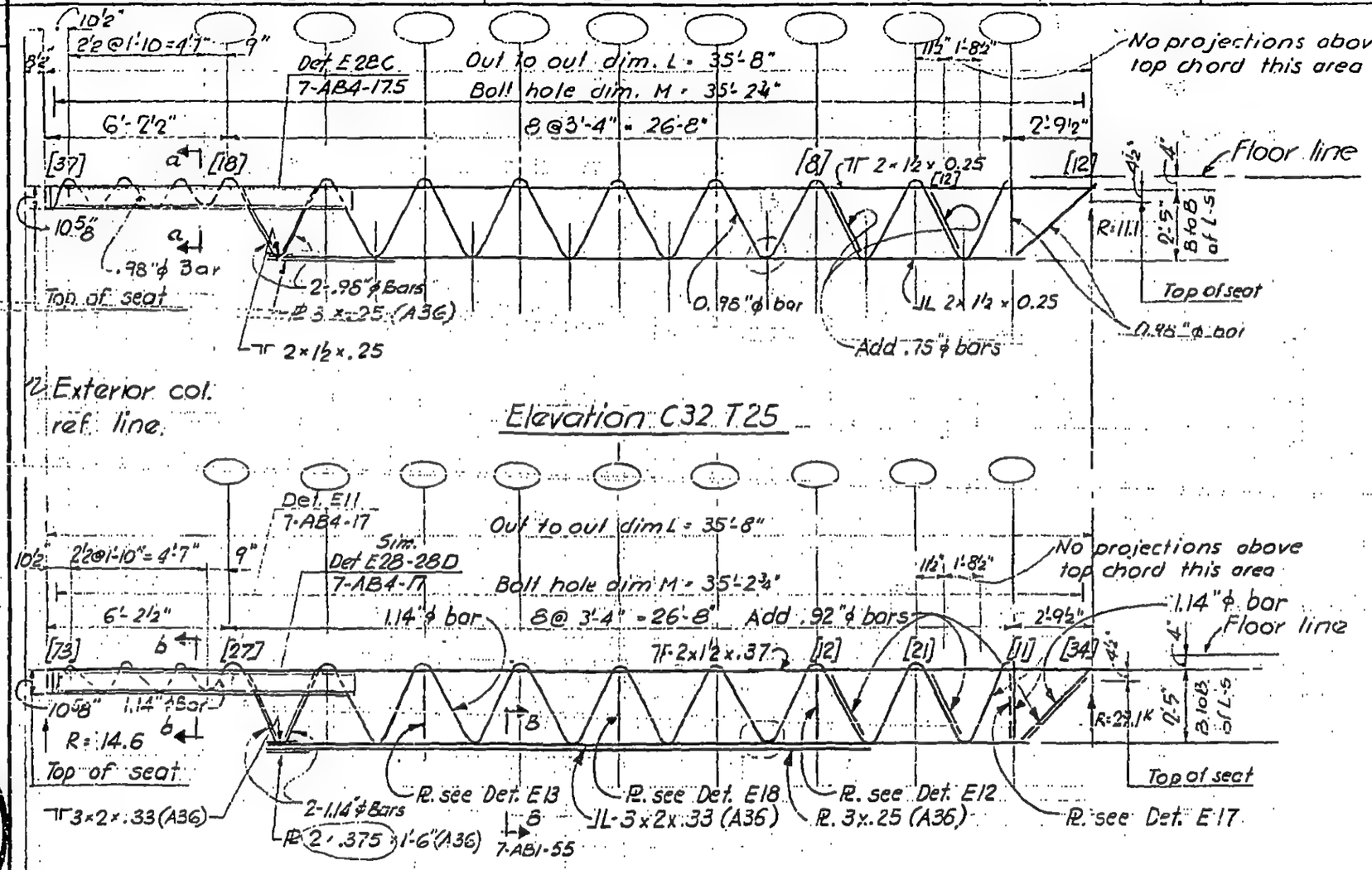

LICENSED PROFESSIONAL ENGINEER
LESLIE E. ROBERTSON
No. 36360
UNIVERSITY OF THE STATE OF NEW YORK

7-AB1-23

SKILLING - HELLE - CHRISTIANSEN - ROBERTSON Structural & Civil Engineers

PROJECT THE WORLD TRADE CENTER | TITLE FLOOR TRUSS C 32T27 | DATE 1-6-69

REVISIONS

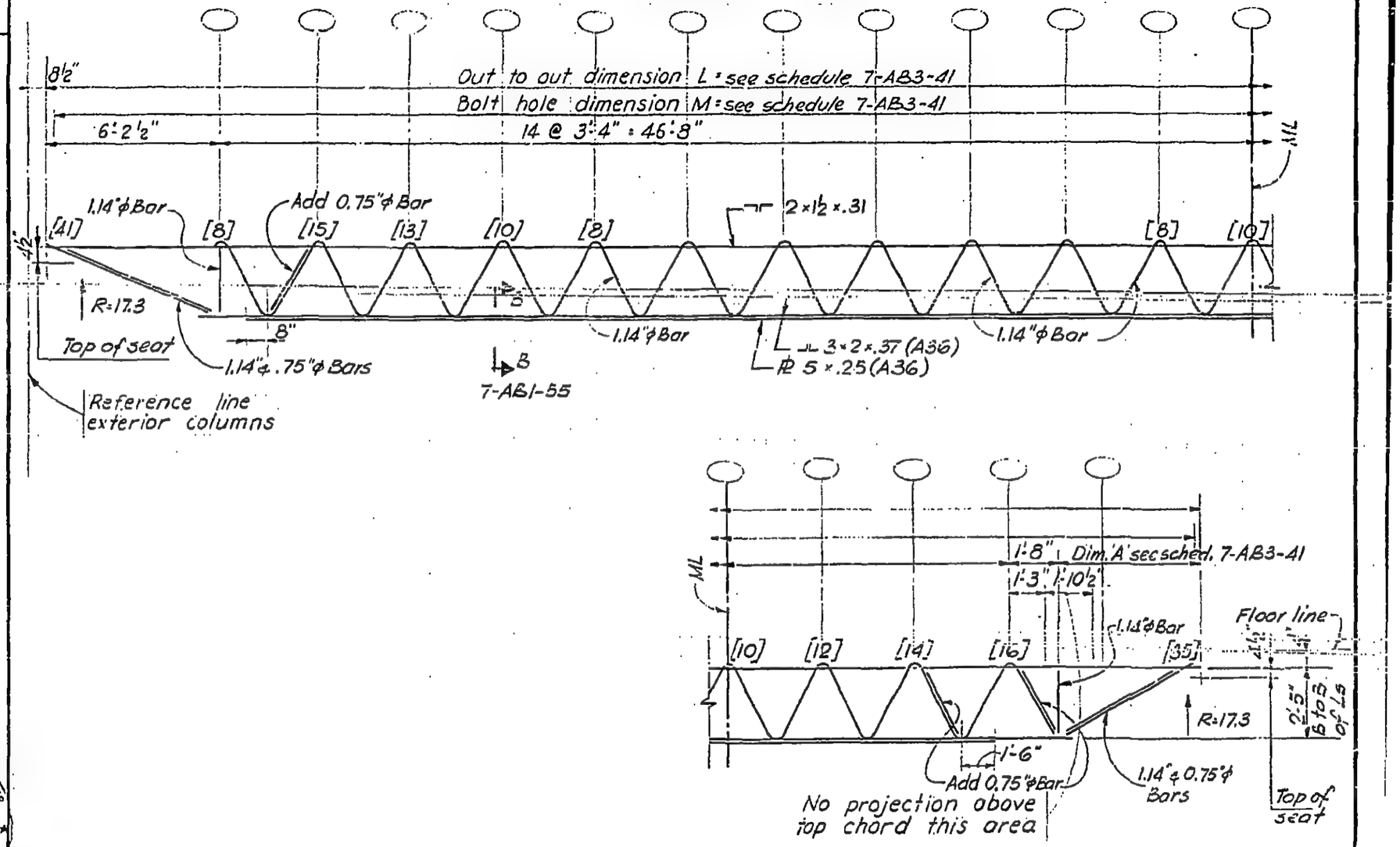

Elevation C 32T27

LICENSED PROFESSIONAL ENGINEER LESLIE E. ROBERTSON No 34360 UNIVERSITY OF THE STATE OF NEW YORK

7-AB1-24

SKILLING - HELLE - CHRISTIANSEN - ROBERTSON Structural & Civil Engineers

PROJECT THE WORLD TRADE CENTER | TITLE FLOOR TRUSS C32T28 | DATE 1-6-69

REVISIONS

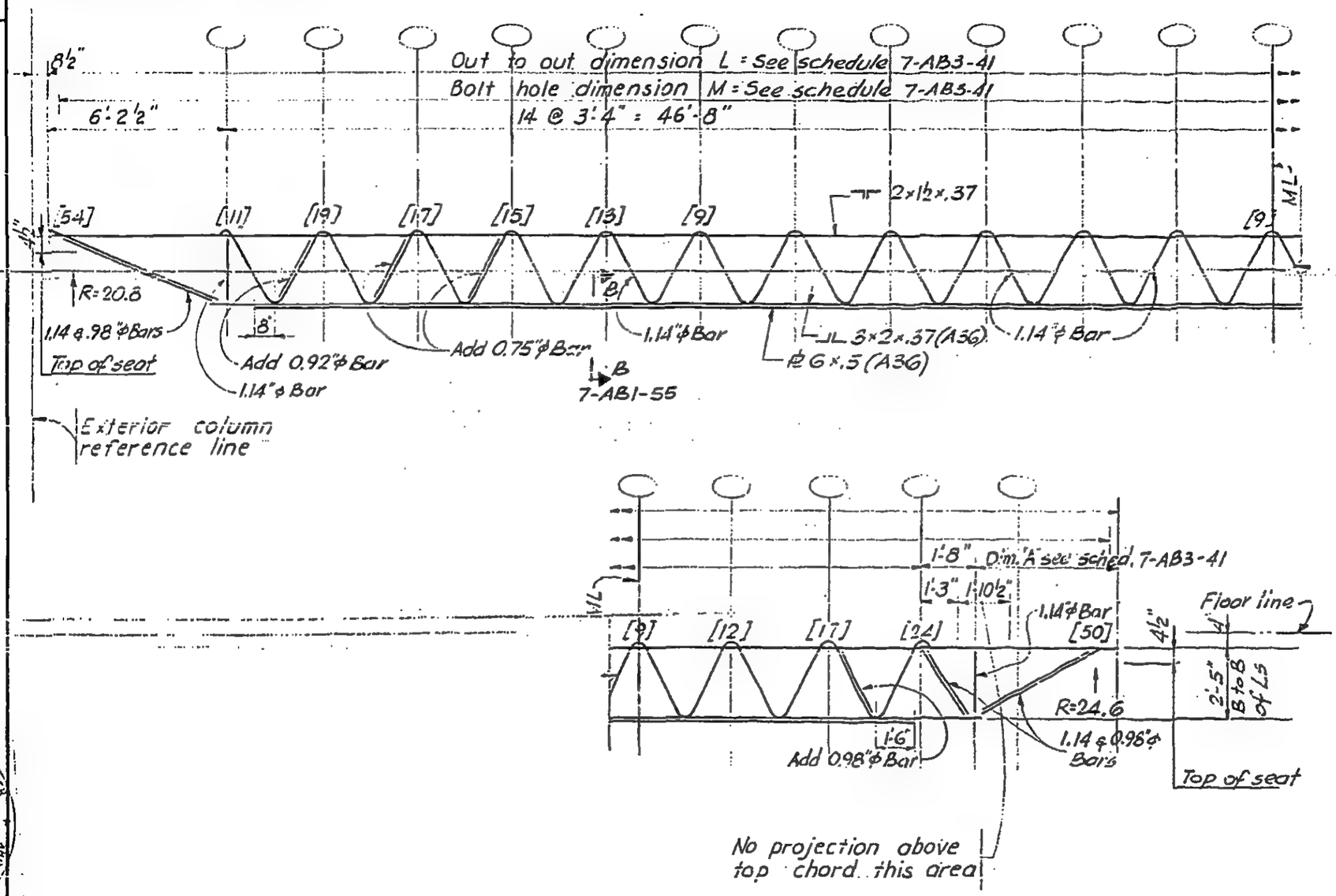

Elevation C 32T28

LICENSED PROFESSIONAL ENGINEER
LESLIE E. ROBERTSON
No. 34360
UNIVERSITY OF THE STATE OF NEW YORK

7-AB1-25

5

SKILLING - HELLE - CHRISTIANSEN - ROBERTSON — Structural & Civil Engineers

PROJECT THE WORLD TRADE CENTER | TITLE FLOOR TRUSS C32T29 | DATE 1-6-69

REVISIONS

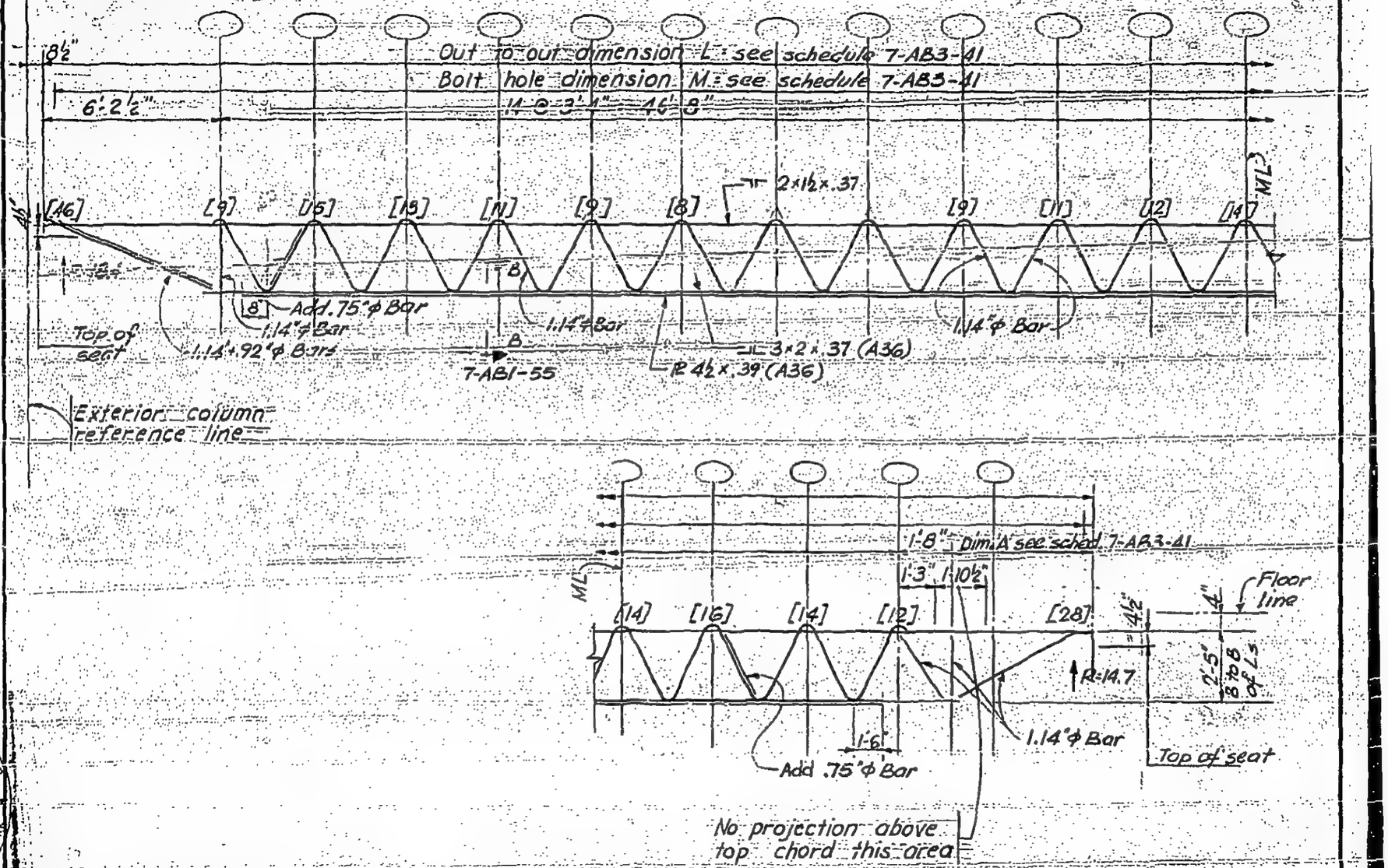

Elevation C32T29

LICENSED PROFESSIONAL ENGINEER
LESLIE E. ROBERTSON
No. 34960
UNIVERSITY OF THE STATE OF NEW YORK

7-AB1-26

REVISIONS

SKILLING - HELLE - CHRISTIANSEN - ROBERTSON — Structural & Civil Engineers

PROJECT THE WORLD TRADE CENTER | TITLE FLOOR TRUSS C 32 T 30 | DATE 1-6-69

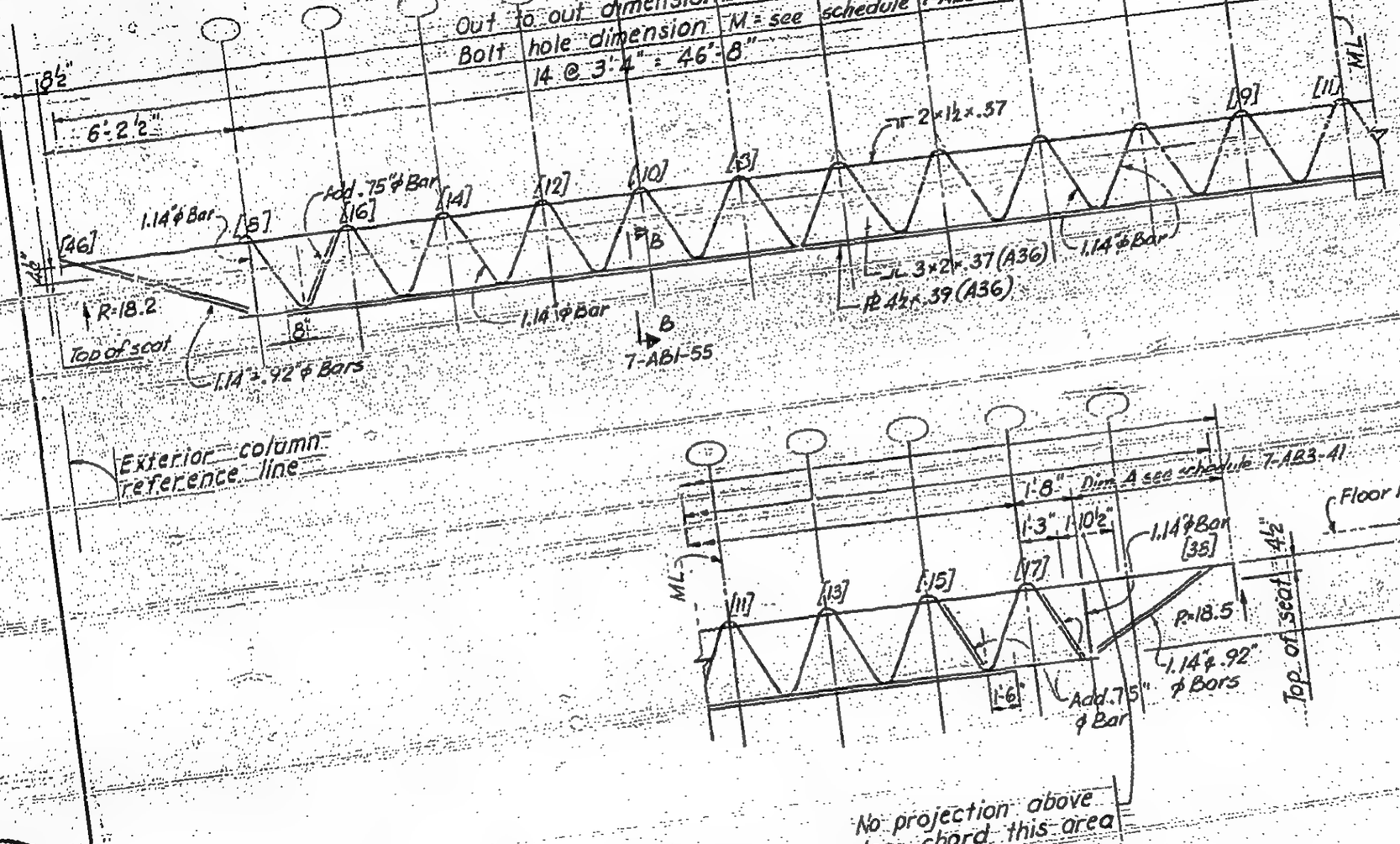

Elevation C 32 T 30

7-AB1-27

LICENSED PROFESSIONAL ENGINEER
LESLIE E. ROBERTSON
No. 34360
UNIVERSITY OF THE STATE OF NEW YORK

REVISIONS

...SEN - ROBERTSON

...THE WORLD TRADE CENTER

Structural & Civil Engineers

TITLE FLOOR TRUSS C32T31

DATE 1-6-69

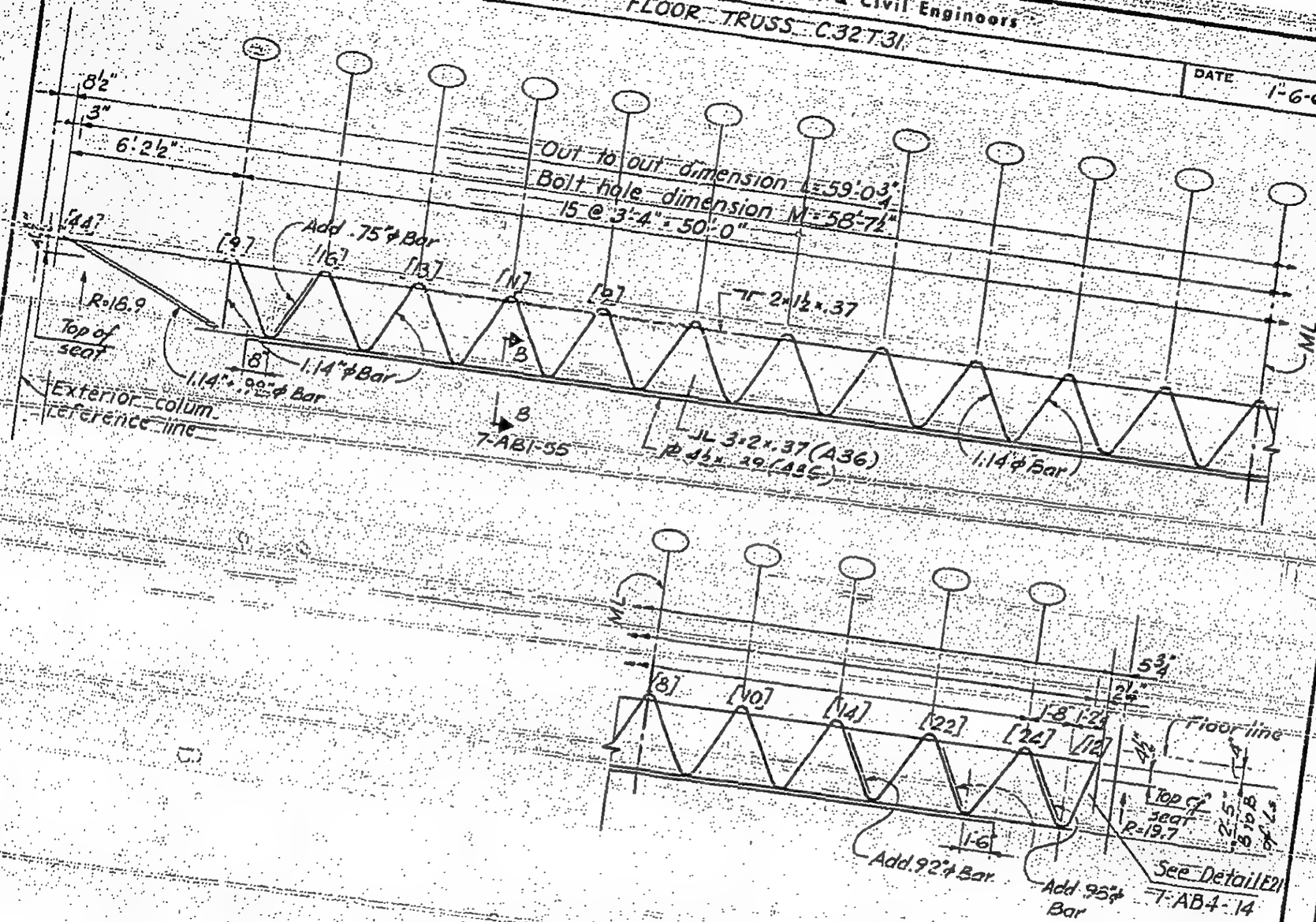

Elevation C32T31

LICENSED PROFESSIONAL ENGINEER
LESLIE E. ROBERTSON
No. 34360
UNIVERSITY OF THE STATE OF NEW YORK

7-AB1-28

SKILLING - HELLE - CHRISTIANSEN - ROBERTSON Structural & Civil Engineers

PROJECT THE WORLD TRADE CENTER | TITLE FLOOR TRUSS C 32 T 32 | DATE 1-6-69

REVISIONS

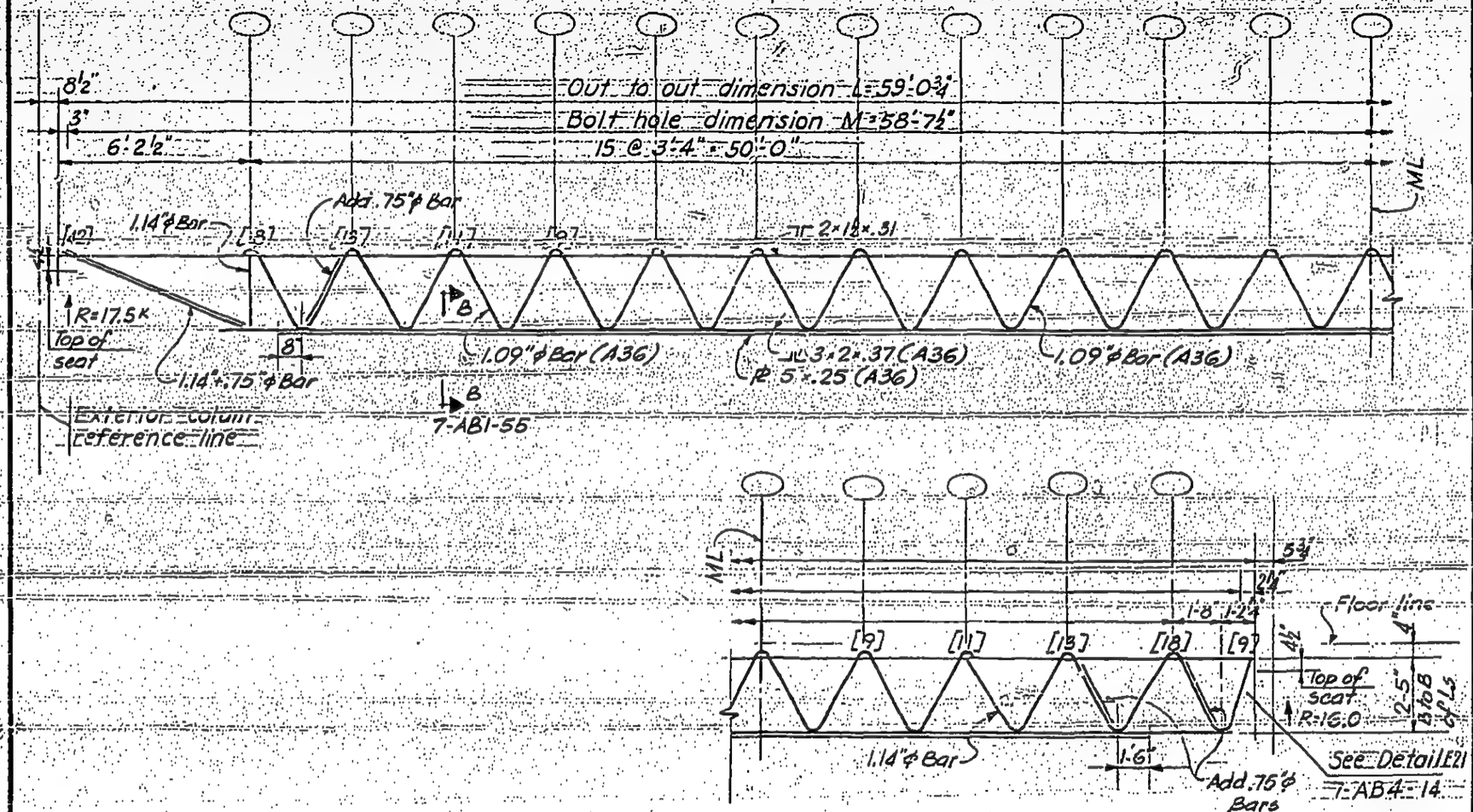

Elevation C32T32

LICENSED PROFESSIONAL ENGINEER
LESLIE E. ROBERTSON
No. [illegible]
NEW YORK

7-AB1-29

SKILLING - HELLE - CHRISTIANSEN - ROBERTSON Structural & Civil Engineers

PROJECT THE WORLD TRADE CENTER | TITLE FLOOR TRUSS C32T33 | DATE 1-6-69

REVISIONS

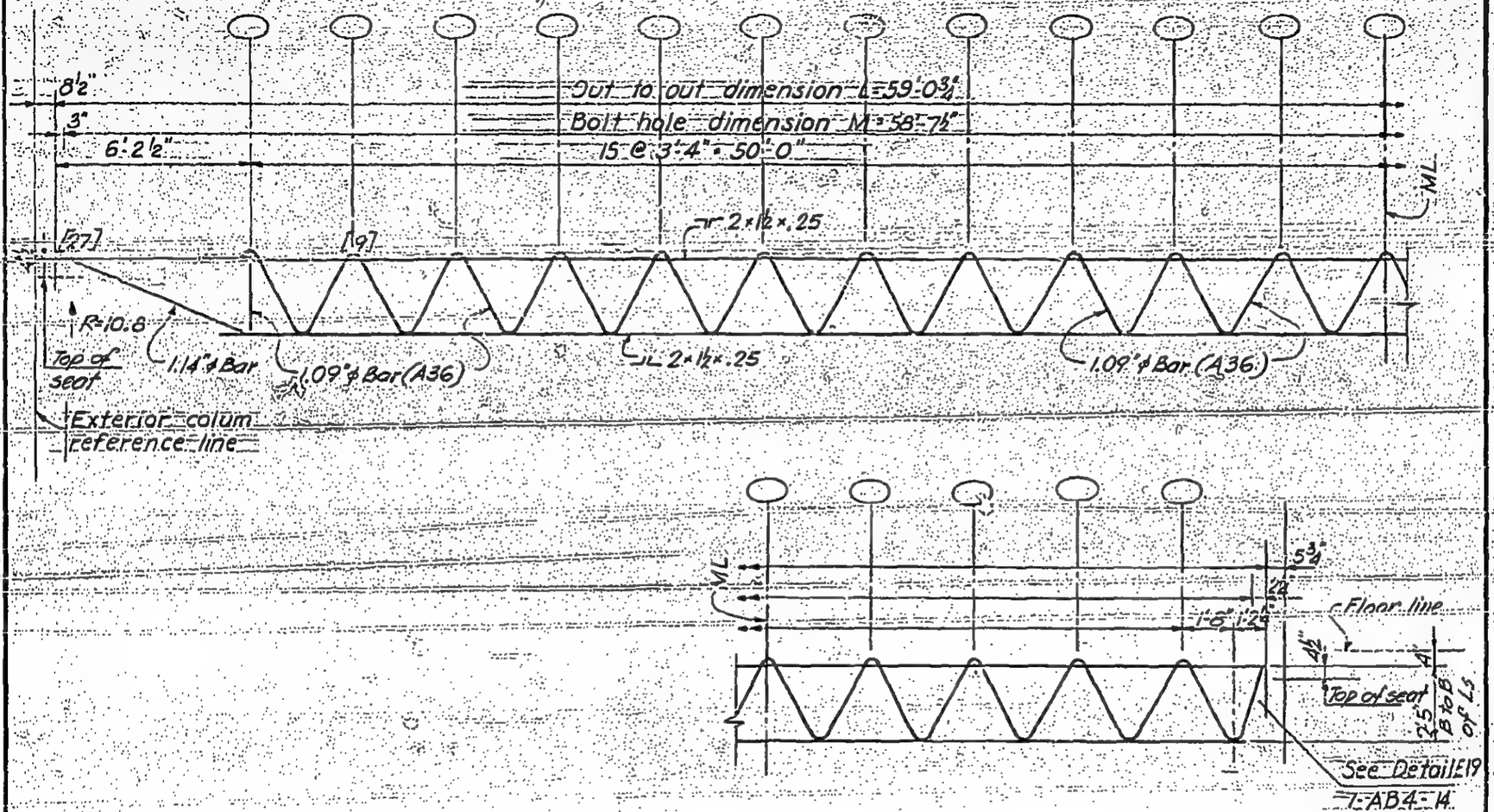

Elevation C32T33

LICENSED PROFESSIONAL ENGINEER
LESLIE E. ROBERTSON
No. 34360
UNIVERSITY OF THE STATE OF NEW YORK

7-AB1-30

SKILLING - HELLE - CHRISTIANSEN - ROBERTSON Structural & Civil Engineers

PROJECT THE WORLD TRADE CENTER | TITLE FLOOR TRUSS C 32 T 34 | DATE 1-6-69

REVISIONS

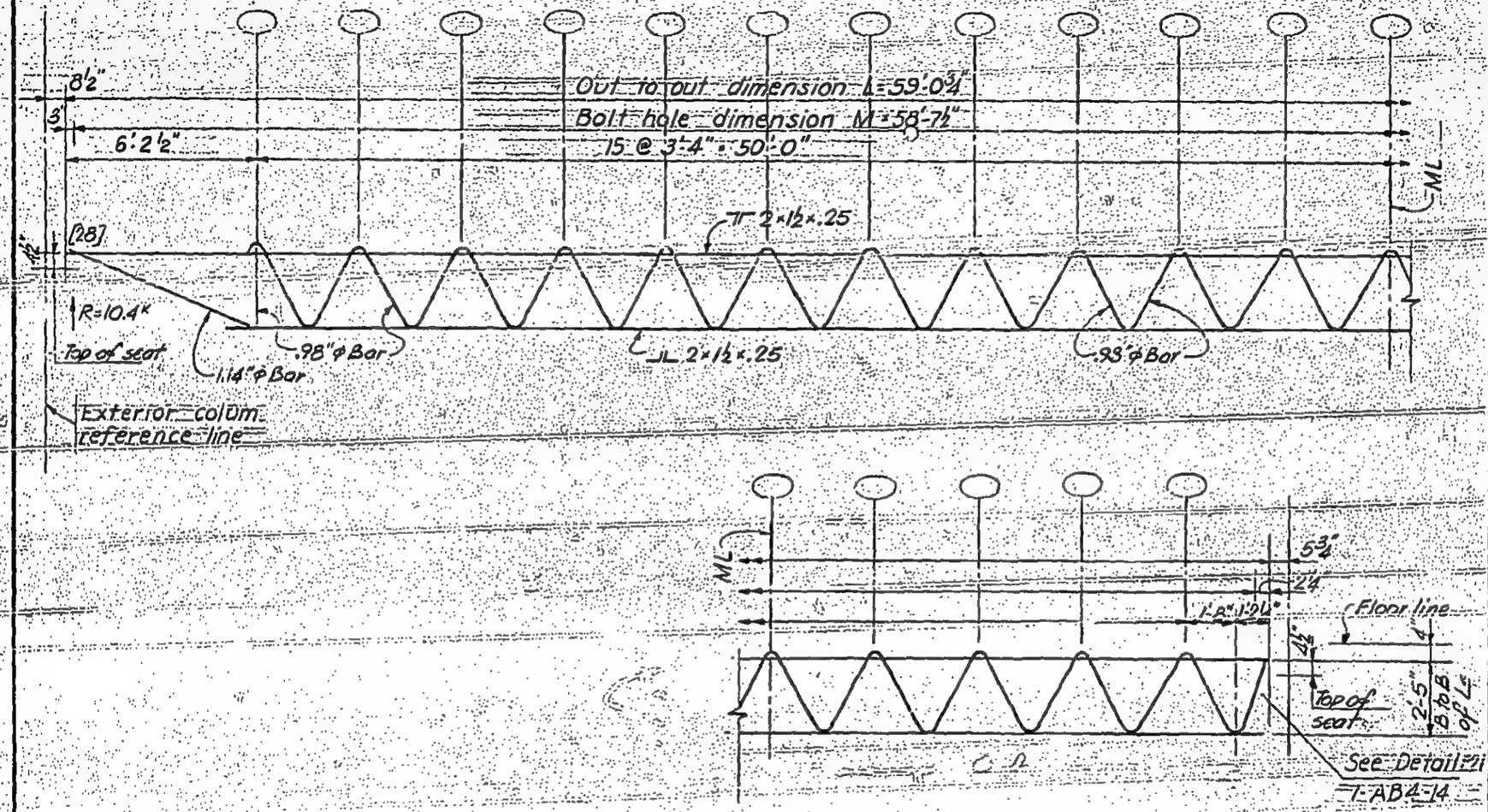

Elevation C 32 T 34

LICENSED PROFESSIONAL ENGINEER
LESLIE E. ROBERTSON
No. 34360
UNIVERSITY OF THE STATE OF NEW YORK

T-AB1-3

SKILLING, HELLE, CHRISTIANSEN, ROBERTSON — Structural & Civil Engineers

PROJECT: THE WORLD TRADE CENTER | TITLE: FLOOR TRUSS C32T36 | DATE: 1-6-69

REVISIONS

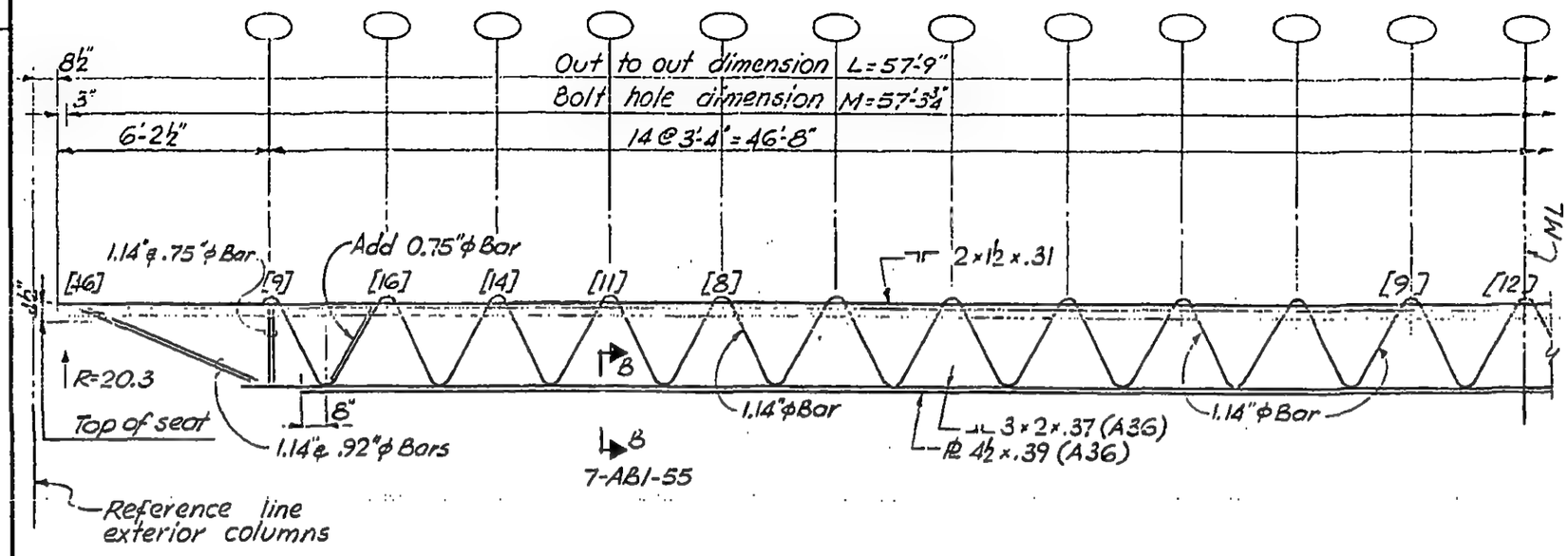

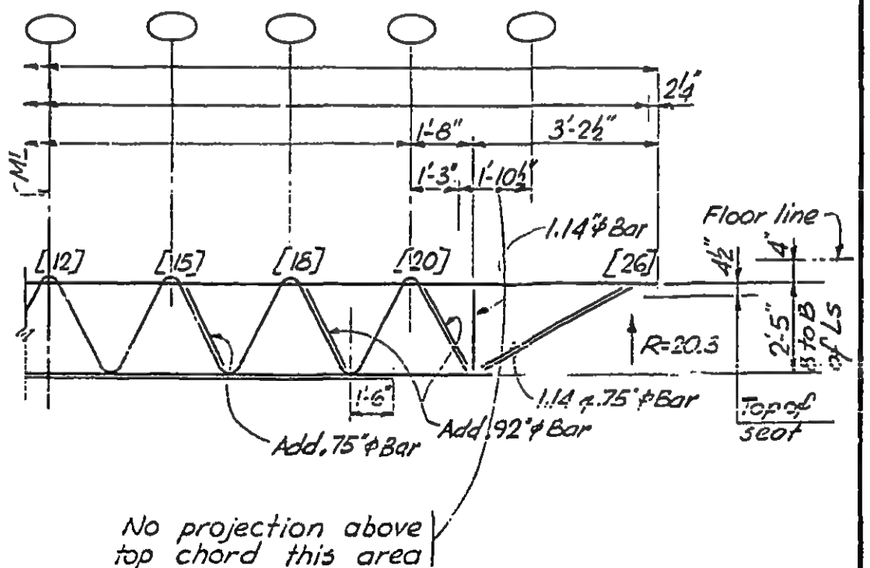

Elevation C32T36

DESIGNED

DRAWN

REVIEWED

12.

7-AB1-32

SKILLING, HELLE, CHRISTIANSEN, ROBERTSON — Structural & Civil Engineers

PROJECT: THE WORLD TRADE CENTER | TITLE: FLOOR TRUSS C32T37 | DATE: 1-6-69

REVISIONS

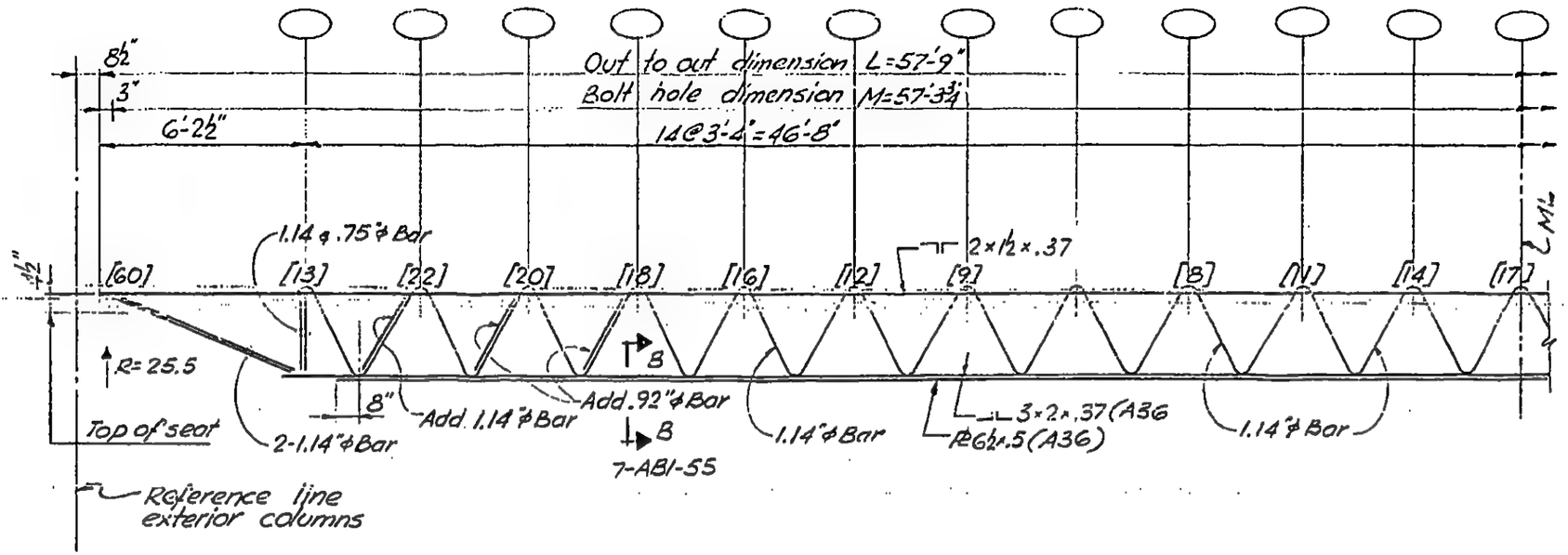

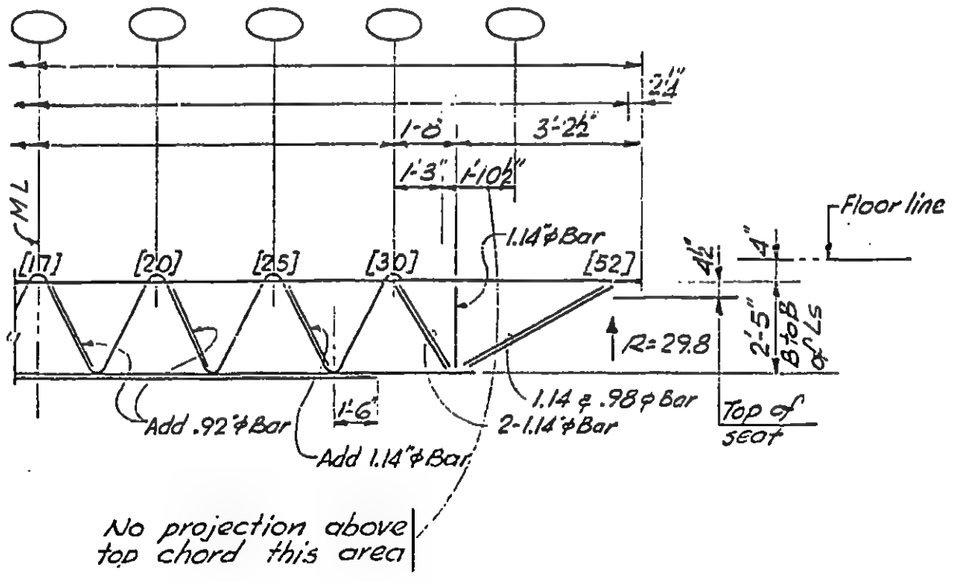

Elevation C 32 T37

LICENSED PROFESSIONAL ENGINEER — LESLIE E. ROBERTSON — No. 34360 — UNIVERSITY OF THE STATE OF NEW YORK

DESIGNED

DRAWN

REVIEWED

13

7-AB1-33

SKILLING, HELLE, CHRISTIANSEN, ROBERTSON — Structural & Civil Engineers

PROJECT	TITLE	DATE
THE WORLD TRADE CENTER	FLOOR TRUSS C32T38	1-6-69

REVISIONS

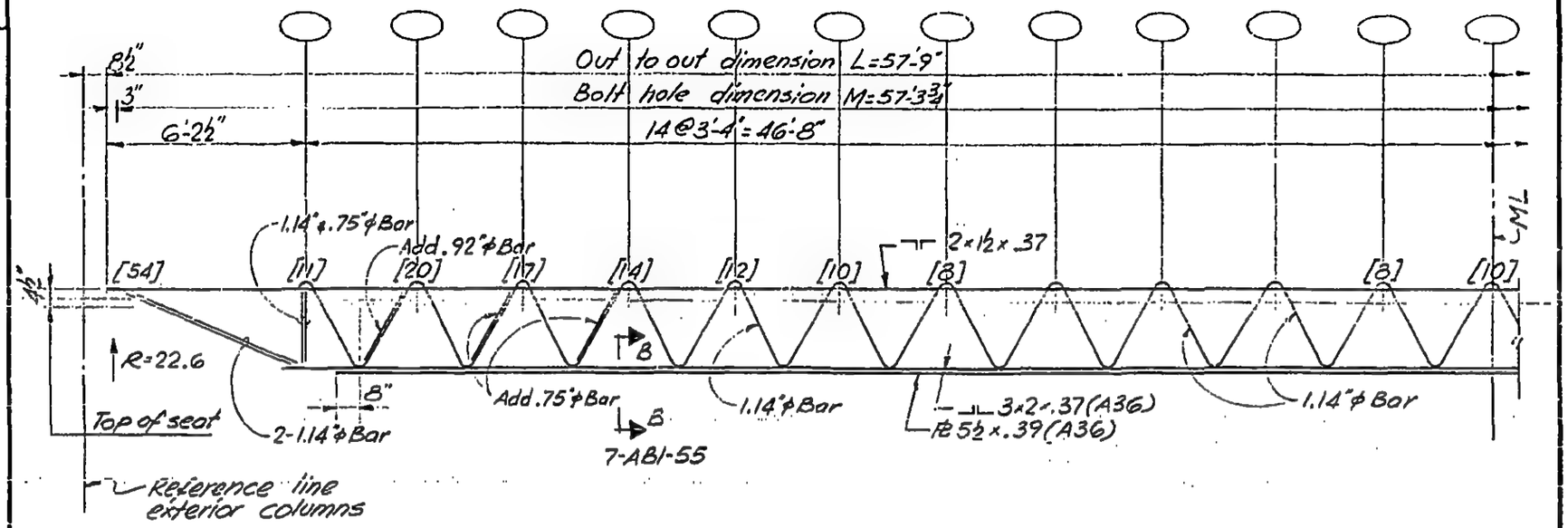

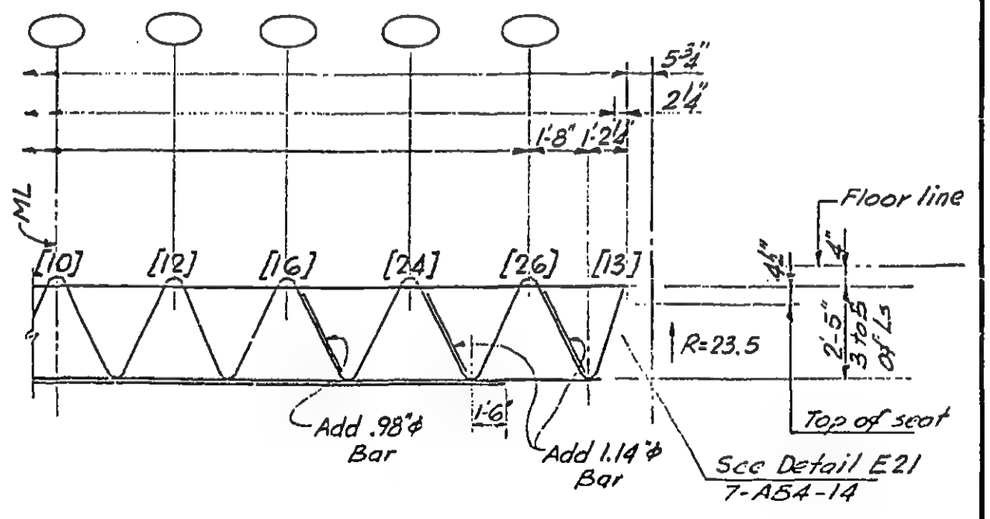

Elevation C32T38

LICENSED PROFESSIONAL ENGINEER — LESLIE E. ROBERTSON — No. 34360 — UNIVERSITY OF THE STATE OF NEW YORK

DESIGNED

DRAWN

REVIEWED

7-AB1-34

SKILLING, HELLE, CHRISTIANSEN, ROBERTSON — Structural & Civil Engineers

PROJECT: THE WORLD TRADE CENTER | TITLE: FLOOR TRUSS C32T39 | DATE: 1-6-69

REVISIONS

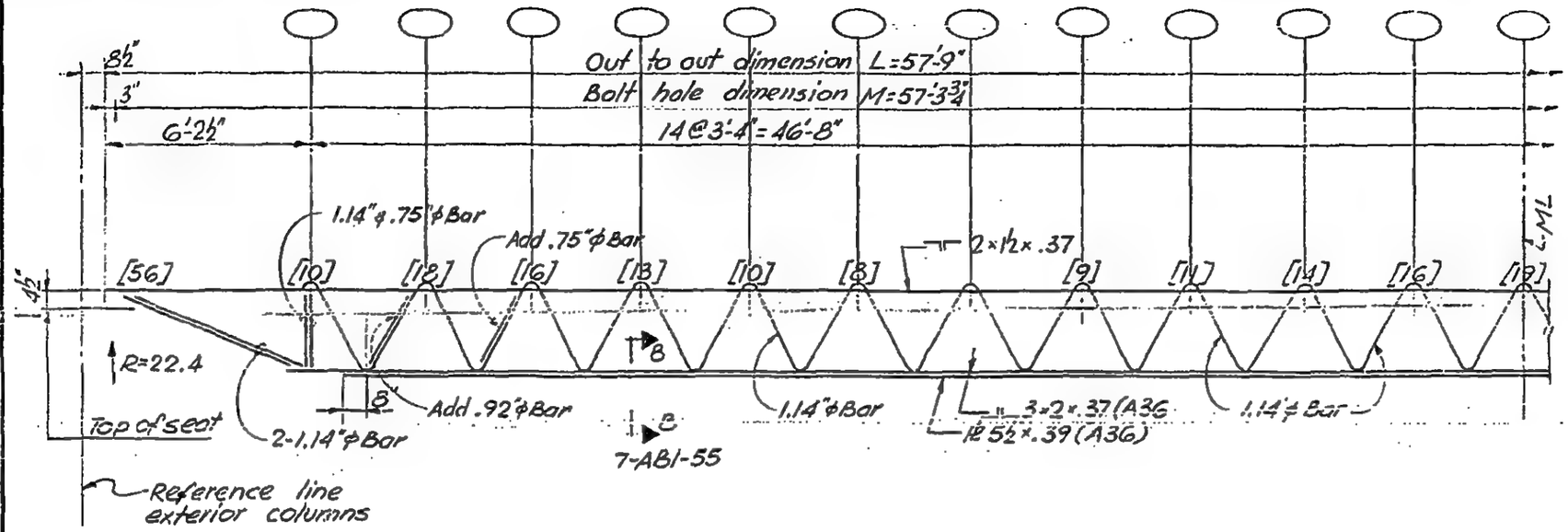

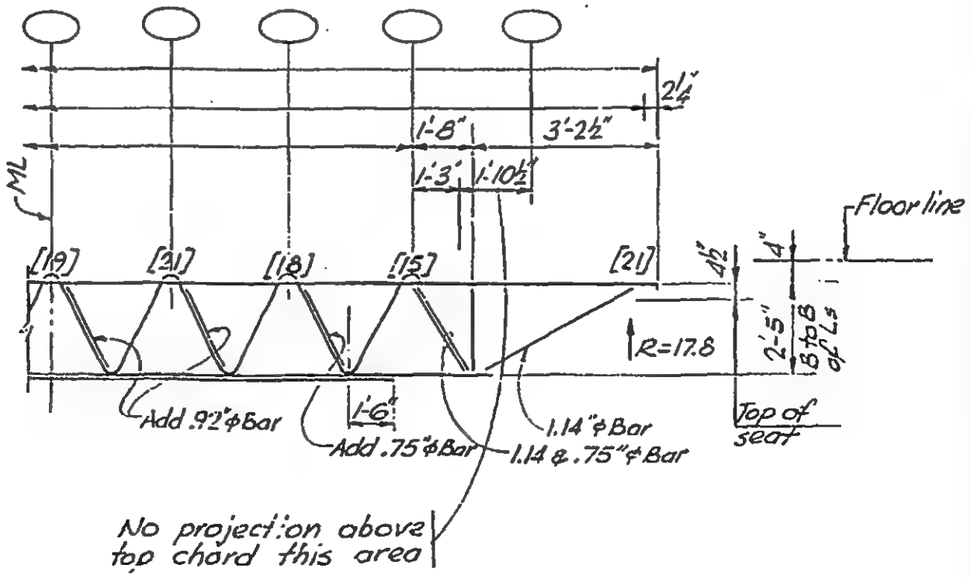

Elevation C32T39

LICENSED PROFESSIONAL ENGINEER — LESLIE E. ROBERTSON — No. 34360 — UNIVERSITY OF THE STATE OF NEW YORK

DESIGNED

DRAWN

REVIEWED

7-AB1-35

SKILLING, HELLE, CHRISTIANSEN, ROBERTSON — Structural & Civil Engineers

PROJECT: THE WORLD TRADE CENTER | TITLE: FLOOR TRUSS C32T40 | DATE: 1-6-69

REVISIONS

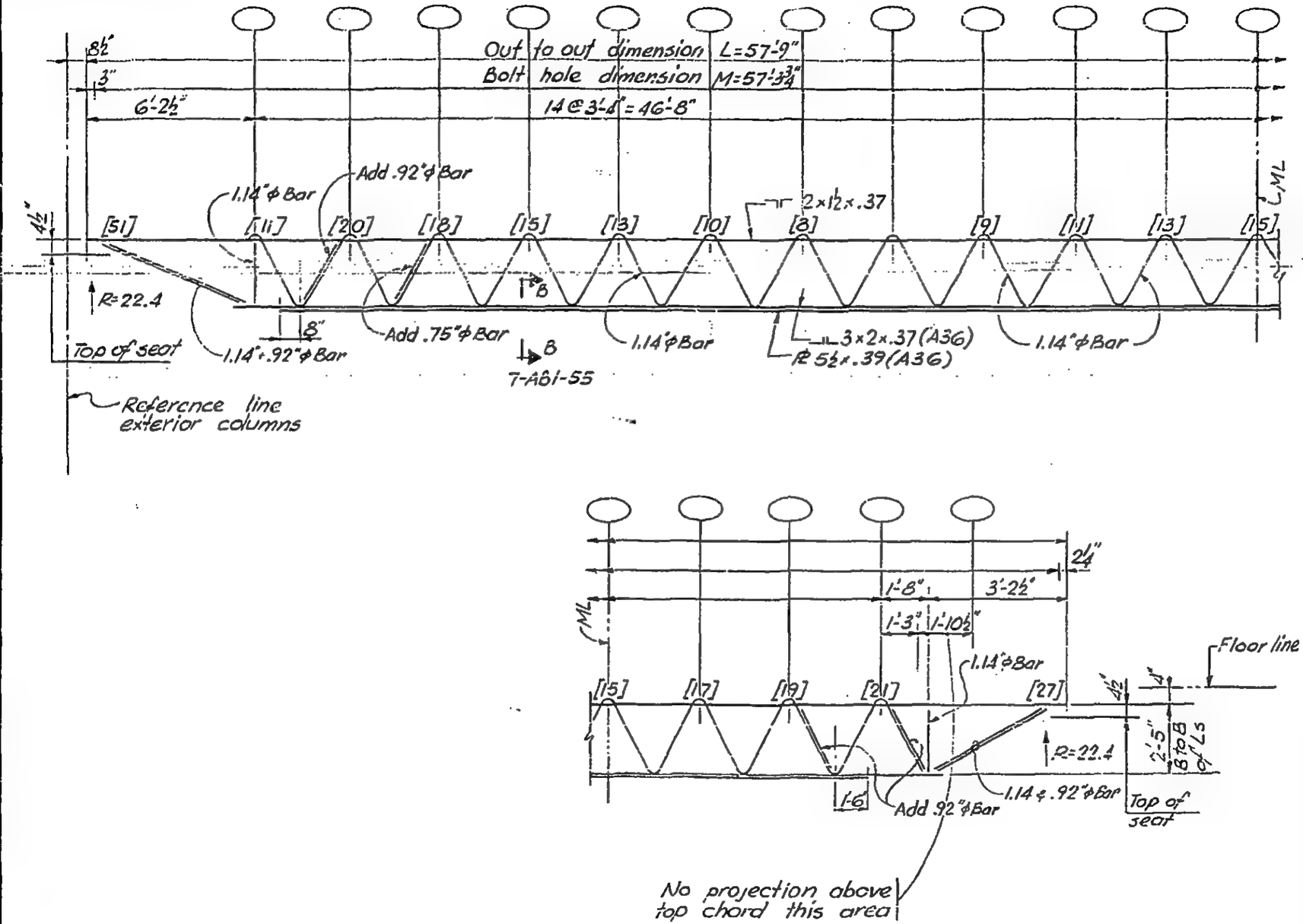

Elevation C 32T40

LICENSED PROFESSIONAL ENGINEER — LESLIE E. ROBERTSON — No. 34360 — UNIVERSITY OF THE STATE OF NEW YORK

DES'D

DRAWN

REVIEWED

7-AB1-36

SKILLING - HELLE - CHRISTIANSEN - ROBERTSON Structural & Civil Engineers

PROJECT THE WORLD TRADE CENTER | TITLE FLOOR TRUSS C 32 T 49 | DATE 11-25-68

REVISIONS

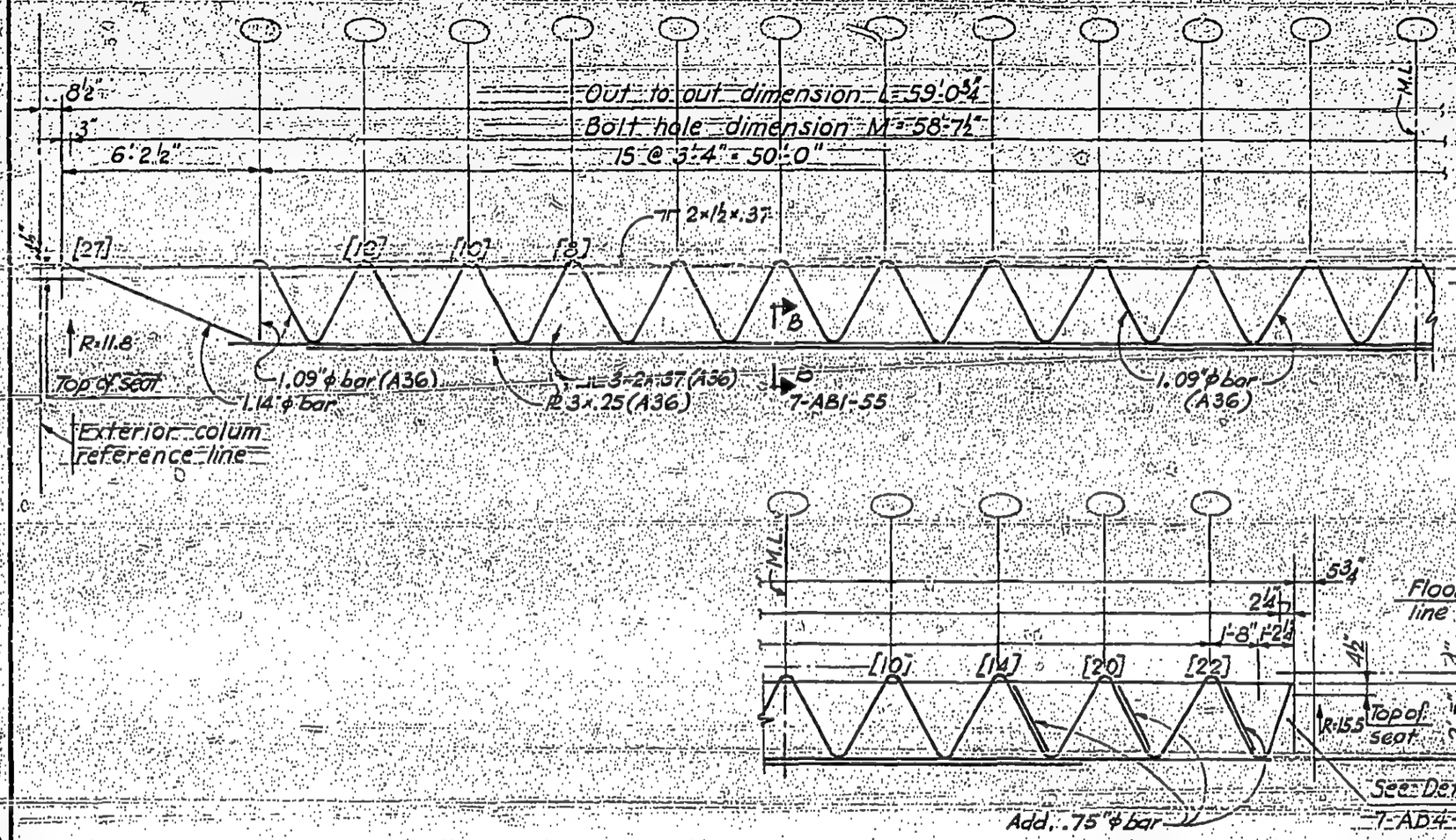

Elevation C 32 T 49

LICENSED PROFESSIONAL ENGINEER LESLIE E. ROBERTSON No. 34360 UNIVERSITY OF THE STATE OF NEW YORK

7-AB1-44

SKILLING - HELLE - CHRISTIANSEN - ROBERTSON — Structural & Civil Engineers

PROJECT: THE WORLD TRADE CENTER | TITLE: FLOOR TRUSS C32T50 | DATE: 11-25-68

REVISIONS

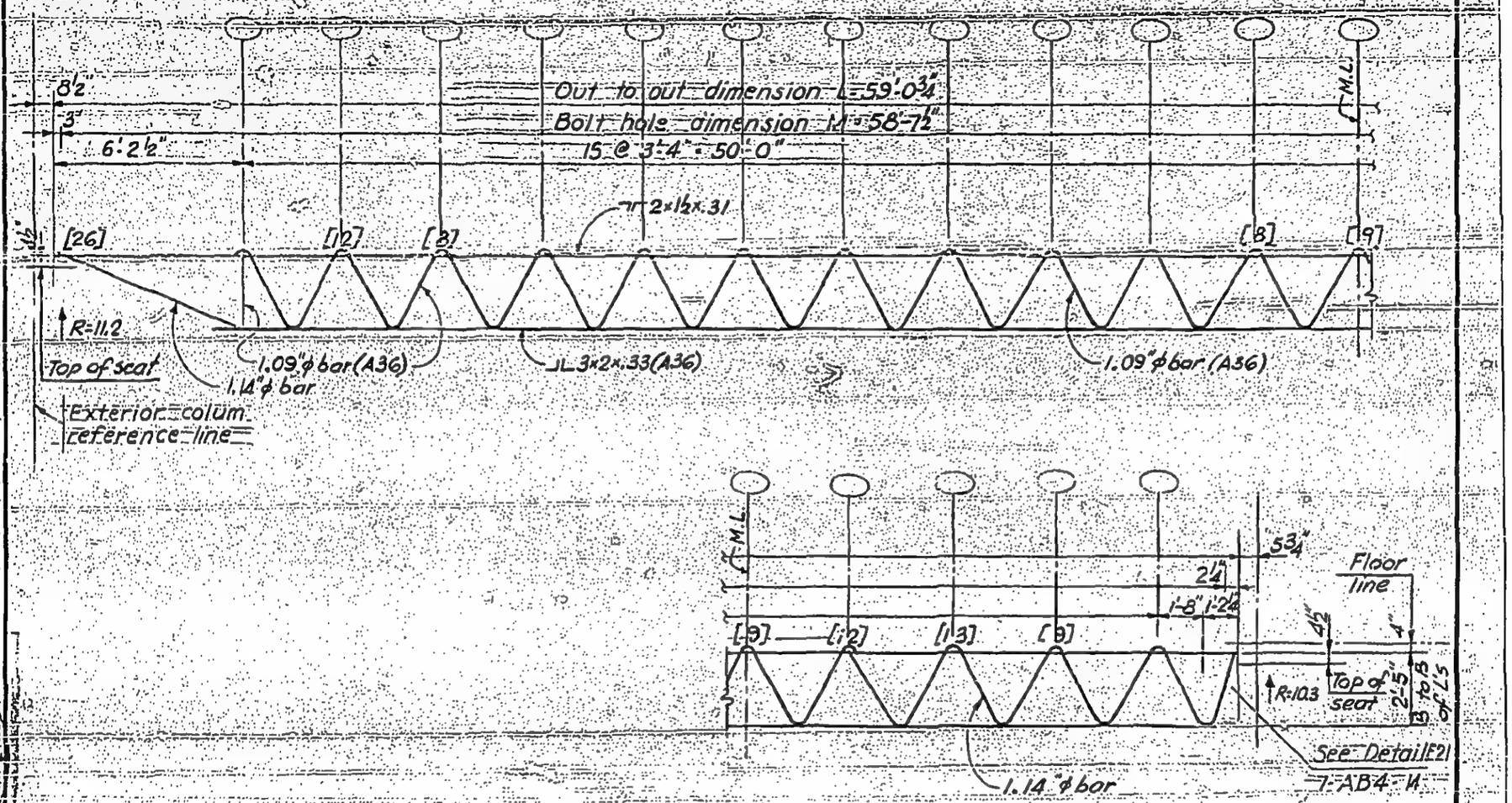

Elevation C 32 T 50.

LICENSED PROFESSIONAL ENGINEER
LESLIE E. ROBERTSON
No. 34360
UNIVERSITY OF THE STATE OF NEW YORK

7-AB1-45

SKILLING - HELLE - CHRISTIANSEN - ROBERTSON Structural & Civil Engineers

PROJECT THE WORLD TRADE CENTER | TITLE FLOOR TRUSS C 32 T 51 | DATE 11-25-68

REVISIONS

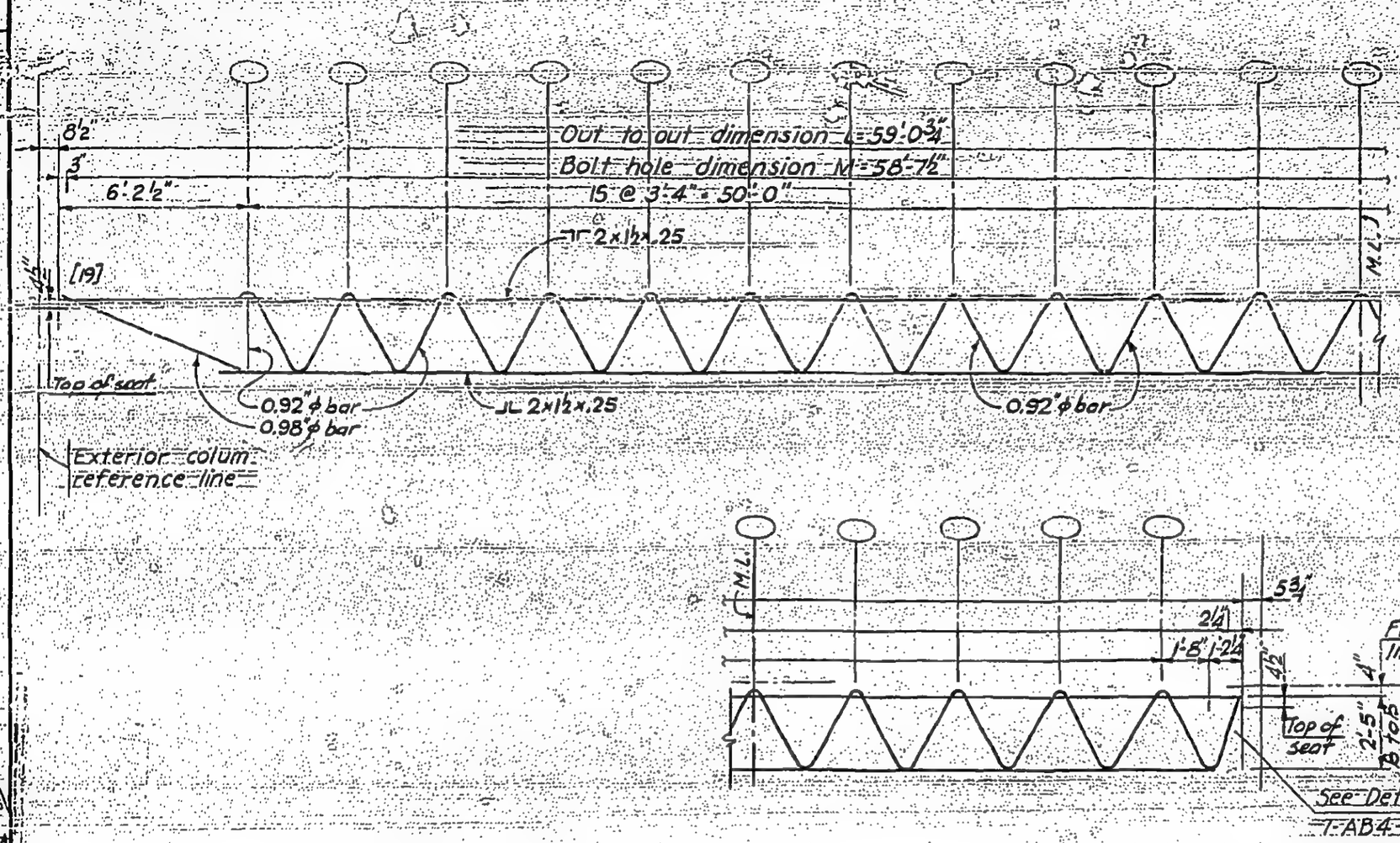

Elevation C 32 T 51

LICENSED PROFESSIONAL ENGINEER
LESLIE E. ROBERTSON
No. 34360
UNIVERSITY OF THE STATE OF NEW YORK

7-AB1-46

SKILLING - HELLE - CHRISTIANSEN - ROBERTSON Structural & Civil Engineers

PROJECT THE WORLD TRADE CENTER | TITLE FLOOR TRUSS C32T52 | DATE 11-25-68

REVISIONS

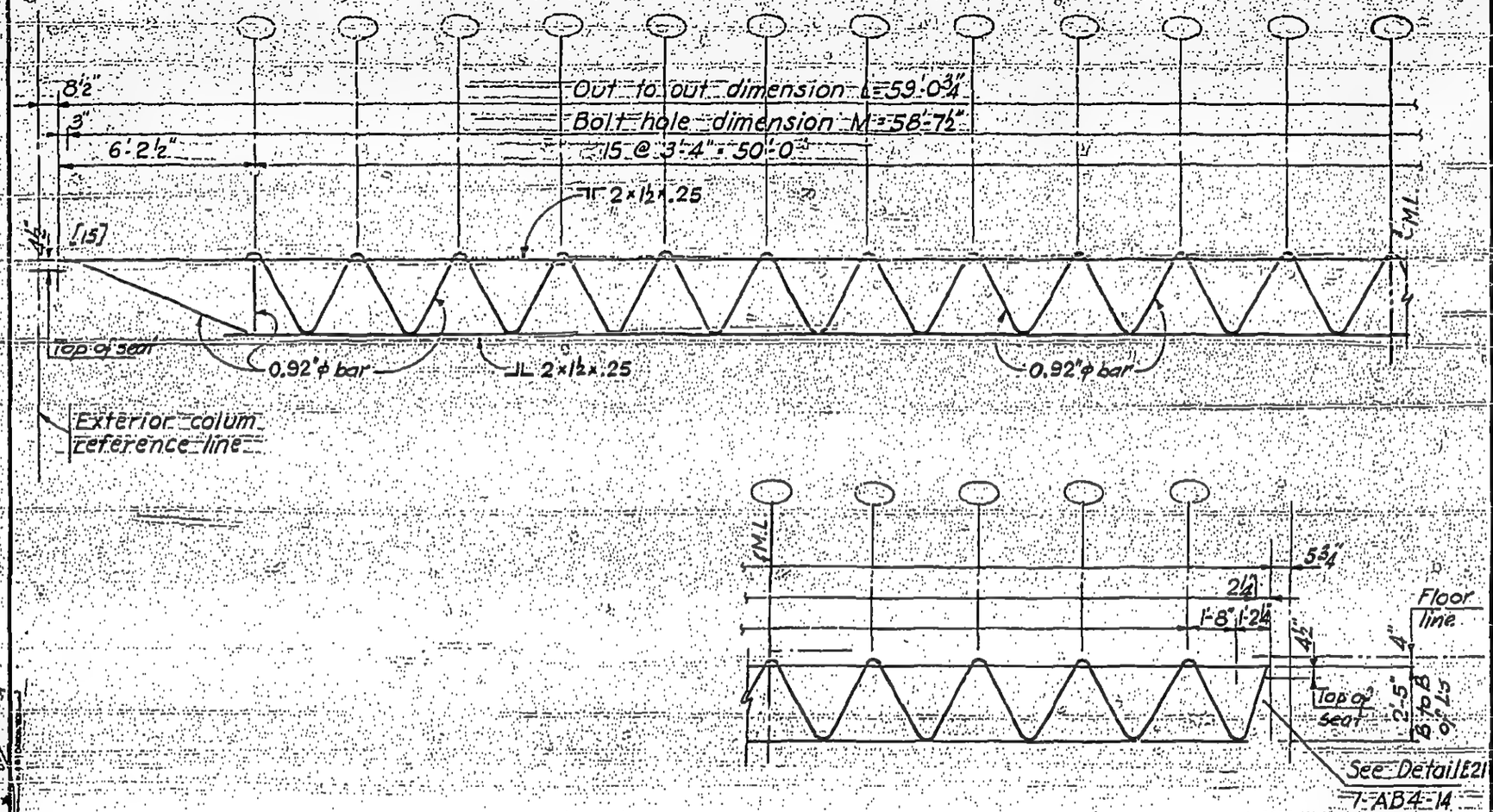

Elevation C32T52

LICENSED PROFESSIONAL ENGINEER
LESLIE E. ROBERTSON
No. 34360
UNIVERSITY OF THE STATE OF NEW YORK

7-AB1-47

SKILLING - HELLE - CHRISTIANSEN - ROBERTSON Structural & Civil Engineers

PROJECT	TITLE	DATE
THE WORLD TRADE CENTER	FLOOR TRUSS C32T53 & (C32T35)	11-25-66

REVISIONS

1-6-69

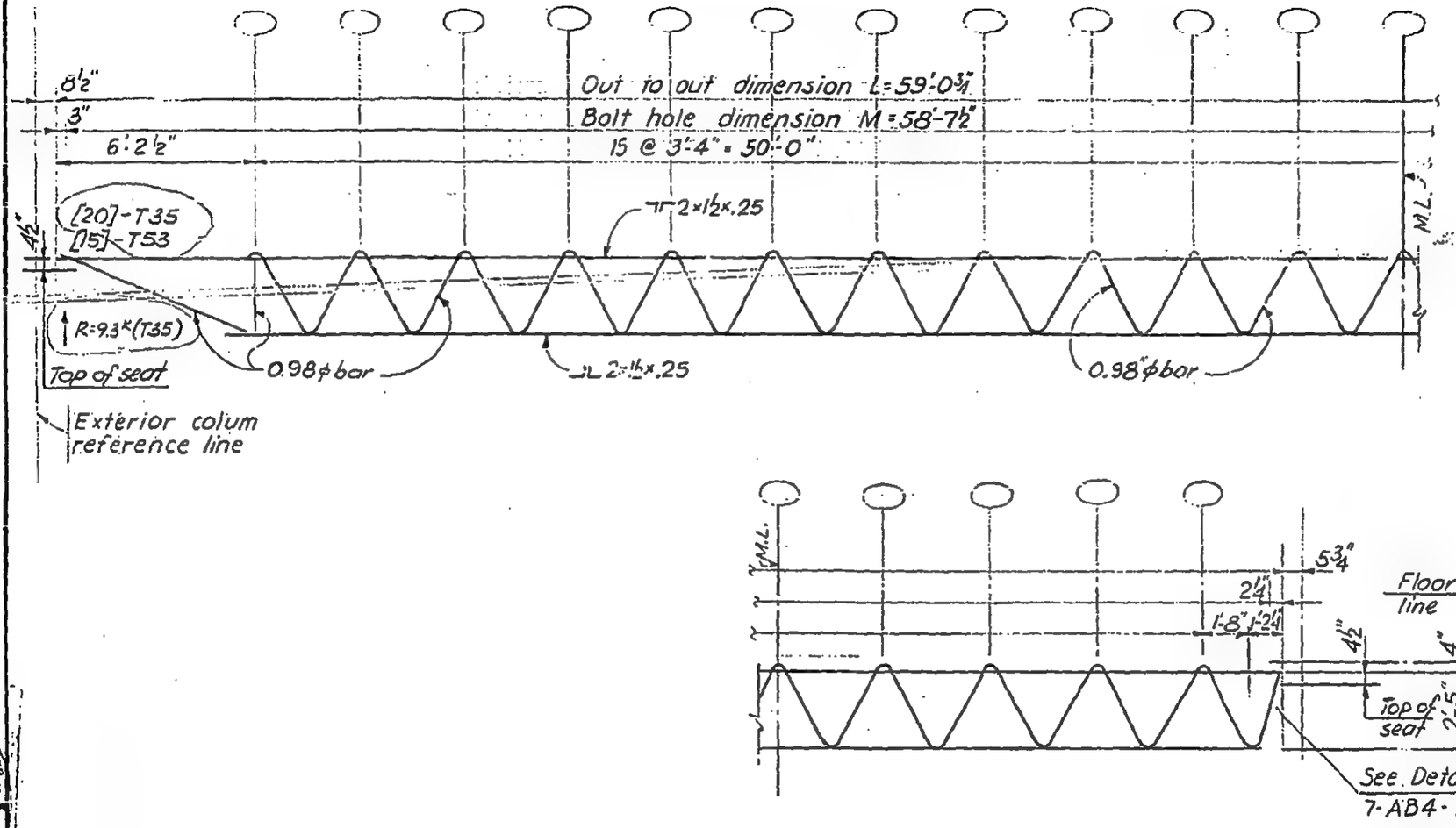

Elevation C32T53

C32T35 similar except as noted

LICENSED PROFESSIONAL ENGINEER
LESLIE E. ROBERTSON
No. 34360
UNIVERSITY OF THE STATE OF NEW YORK

SKILLING - HELLE - CHRISTIANSEN - ROBERTSON Structural & Civil Engineers

PROJECT THE WORLD TRADE CENTER | TITLE TYPICAL WEB DETAILS | DATE 10-20-67

REVISIONS

1-3-68

2-15-68

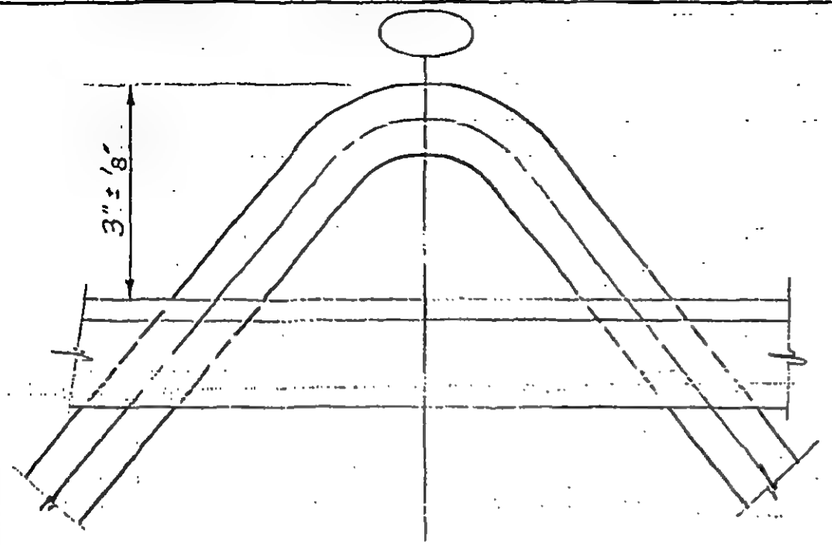

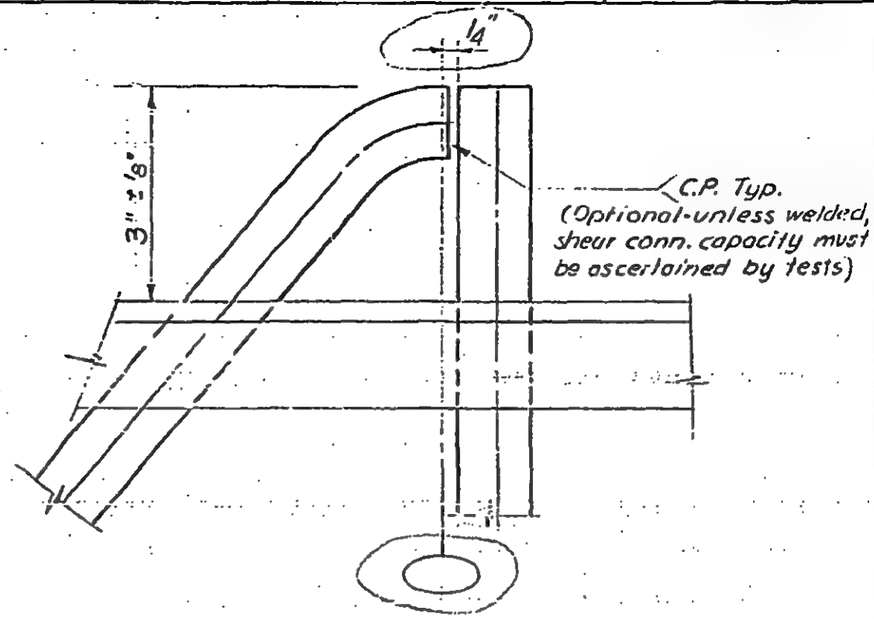

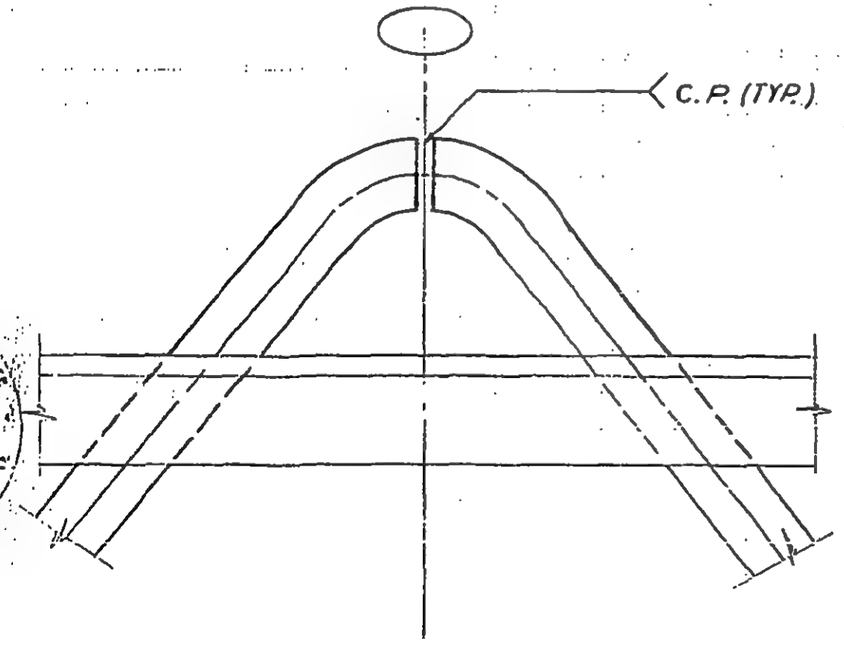

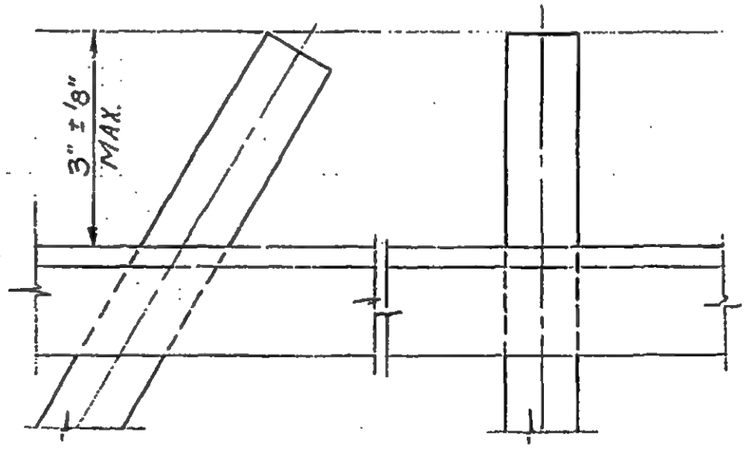

LICENSED PROFESSIONAL ENGINEER
LESLIE E. ROBERTS
No. 34360
REGISTERED BY THE STATE OF NEW YORK

TOP CHORD - C32 TRUSSES

7-ABI-52

SKILLING - HELLE - CHRISTIANSEN - ROBERTSON Structural & Civil Engineers

PROJECT	TITLE	DATE
THE WORLD TRADE CENTER	TYPICAL WEB DETAILS	10-20-67

REVISIONS

1-3-68

4-1-68
7-22-68

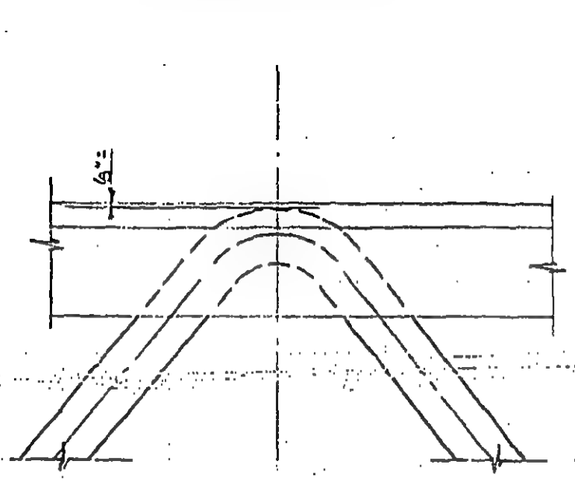

TOP CHORD - C24 & S24 TRUSSES

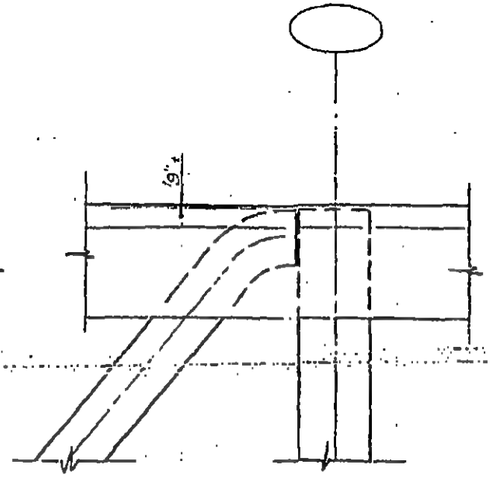

TOP CHORD
C24 & S24 TRUSSES

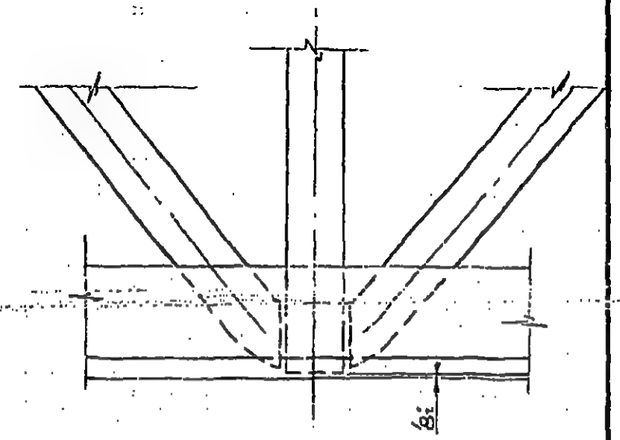

BOTTOM CHORD
C24 & S24 TRUSSES
(Where applicable)

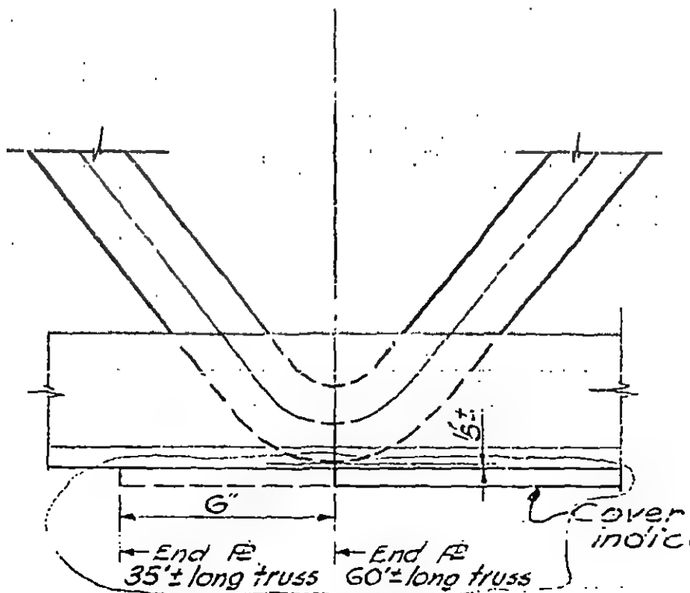

BOTTOM CHORD - C32 TRUSSES
C24 & S24 TRUSSES (Where applicable)

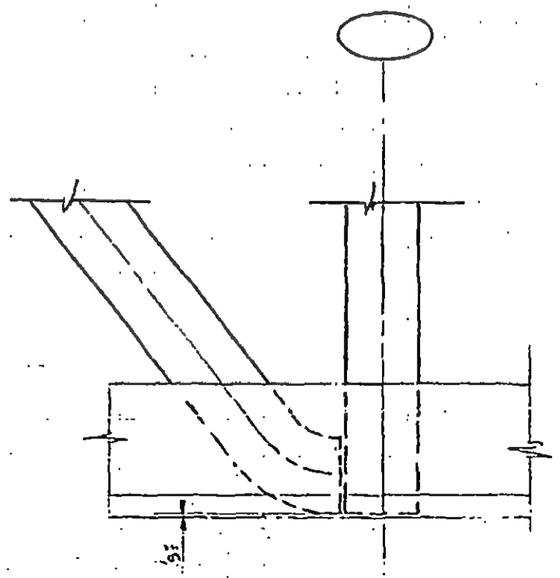

BOTTOM CHORD - C32, C24 & S24
TRUSSES

LICENSED PROFESSIONAL ENGINEER
LESLIE E. ROBERTS
No. 34360
REGISTERED UNDER THE LAWS OF THE STATE OF N.Y.

7-AB1-53

SKILLING - HELLE - CHRISTIANSEN - ROBERTSON. Structural & Civil Engineers

PROJECT THE WORLD TRADE CENTER | TITLE FLOOR TRUSSES - CAMBERS | DATE 2-15-68

REVISIONS

4-15-68
8-1-68
8-15-68
10-4-68
11-25-68
1-6-69

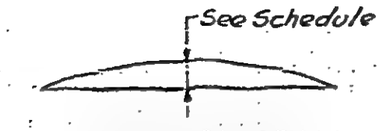

CAMBER DIAGRAM

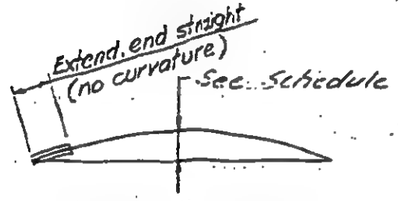

CAMBER DIAGRAM
C32T14 thru C32T26

Truss No	Camber at midspan (in)	Truss No	Camber at midspan (in)
C32T1	2	C32T27	$1\frac{15}{16}$
C32T2	$2\frac{1}{16}$	C32T28	$1\frac{15}{16}$
C32T3	$2\frac{1}{16}$	C32T29	$1\frac{7}{8}$
C32T4	$\frac{3}{4}$	C32T30	$1\frac{7}{8}$
C32T5	$\frac{3}{8}$	C32T31	2
C32T6	$\frac{15}{16}$	C32T32	2
C32T7	$2\frac{1}{16}$	C32T33	$1\frac{3}{4}$
C32T8	2	C32T34	$1\frac{15}{16}$
C32T9	$1\frac{15}{16}$	C32T35	$\frac{3}{4}$
C32T10	$1\frac{11}{16}$	C32T36	$2\frac{1}{4}$
C32T11	$1\frac{5}{16}$	C32T37	$2\frac{1}{4}$
C32T12	$\frac{1}{4}$	C32T38	$2\frac{1}{8}$
C32T13	$\frac{7}{16}$	C32T39	2
C32T14	2	C32T40	2
C32T15	$2\frac{1}{16}$		
C32T16	$2\frac{1}{16}$		
C32T17	2		
C32T18	$2\frac{1}{16}$		
C32T19	$1\frac{15}{16}$		
C32T20	$1\frac{11}{16}$		
C32T21	$1\frac{3}{8}$		
C32T22	$\frac{13}{16}$		
C32T23	$\frac{3}{8}$		
C32T24	$\frac{5}{16}$		
C32T25	$\frac{1}{2}$		
C32T26	$\frac{7}{8}$		
C32T49	2		
C32T50	$1\frac{7}{8}$		
C32T51	$1\frac{1}{16}$		
C32T52	$1\frac{1}{4}$		
C32T53	$\frac{11}{16}$		

LICENSED PROFESSIONAL ENGINEER LESLIE E. ROBERTSON No. 34950 UNIVERSITY OF THE STATE OF NEW YORK

7-A61-54

SKILLING - HELLE - CHRISTIANSEN - ROBERTSON Structural & Civil Engineers

PROJECT THE WORLD TRADE CENTER | TITLE FLOOR TRUSS - SECTION A-A (& B-B) | DATE 4-1-68

REVISIONS

7-22-68
10-15-68

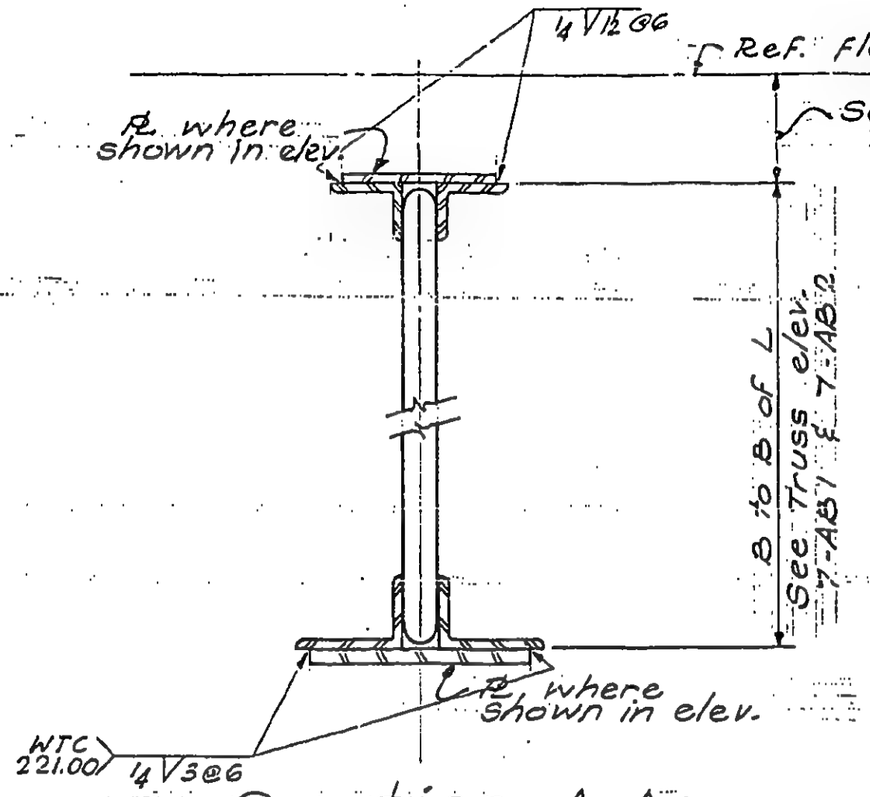

Section A-A

NOTE: Continuous welds to be provided at ends of plates at top and bottom chords and at intersections with 32T truss at top chords.

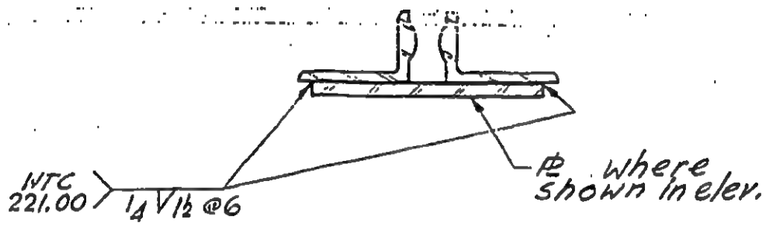

Section B-B

NOTE: Provide continuous welds at ends of plates

LICENSED PROFESSIONAL ENGINEER LESLIE E. ROBERTSON No. 34210 UNIVERSITY OF THE STATE

7-AB1-55

14

SKILLING - HELLE - CHRISTIANSEN - ROBERTSON — Structural & Civil Engineers

PROJECT THE WORLD TRADE CENTER | TITLE FLOOR TRUSSES - INDEX & GENERAL NOTES | DATE 10/20/67

REVISIONS

1-3-68
1-26-68
2-15-68
4-1-68
8-1-68
8-15-68
10-4-68
1-3-69
1-6-69
2-3-69
3-3-69
4-1-69
Printed 5-1-69

7-AB2-	1	Floor Trusses - Index & General Notes
7-AB2-	2	Floor Truss 24T7, 24T7A, 24T7B
7-AB2-	3	Floor Truss 24T8, 24T8A, 24T8B
7-AB2-	4	Floor Truss 24T9, 24T9A
7-AB2-	5	Floor Truss 24T10, 24T10A, 24T10B
7-AB2-	6	Bridging 24T11, 24T11A,
7-AB2-	7	Bridging 24T12,
7-AB2-	8	Bridging 24T13, 13A, 13B, 13C,
7-AB2-	8.1	Void
7-AB2-	9	Floor Truss 24T14, 14B
7-AB2-	10	Floor Truss 24T15,
7-AB2-	11	Floor Truss 24T16,
7-AB2-	12	Floor Truss 24T7C, 24T7D, 24T7E
7-AB2-	13	Floor Truss 24T10C, 24T10D, 24T10E
7-AB2-	14	Floor Truss 24T14A, 24T15A, 24T16A
7-AB2-	15	Floor Truss 24T11B, 24T11C, 24T13D
7-AB2-	16	Floor Truss 24T7F, 24T7G, 24T7H
7-AB2-	17	Floor Truss 24T16B, 24T16C
7-AB2-	18	Floor Truss 24T10F, 24T10G, 24T10H
7-AB2-	19	Floor Truss 24T8C, 24T8D, 24T8E
7-AB2-	20	Floor Truss 24T10J, 24T10K, 24T10L

GENERAL NOTES

1. All material, including detail material not shown on these dwgs., to be Fy = 50 unless otherwise noted.

2. All floor truss angles have short legs vertical.

3. Horizontal shear forces between truss panel points and the composite concrete slab are indicated [ ] in the truss elevations. Where no shear force is given, the connection shall be proportioned for a force of 5 Kips ([5]). See Dwg. 7-AB1-1 for additional notes for additional shear forces.

4. See Dwg. 7-AB1-1 for notes regarding the joint occurrence of longitudinal and transverse horizontal shear force.

5. Chord stresses are indicated in truss elevations as "P = ". Where no force is given each truss chord splice connection shall be proportioned for a minimum force of 23 Kips (P = 23).

6. Vertical shear forces between adjacent panels are indicated in truss elevations are "V = ". Where no force is given, shear transfer connection shall be proportioned for a minimum force of 5 Kips (V = 5). Connections shall be proportioned for a shear force of both positive sign and negative sign.

7. Contractor shall supply representative calculations and/or test results for each connection proportioned by the Contractor. All connections, details and the like are subject to approval by the Engineer.

8. End reactions of each truss are indicated in truss elevations as "R = ". Where no force is given, end connections shall be proportioned for a minimum reaction of 9 Kips (R = 9).

9. Truss shear, indicating minimum requirements for each truss web member, is tabulated across the bottom of the truss elevations. Where no shear is given, web members and their connections shall be proportioned for a minimum shear of 2.2 Kips.

LICENSED PROFESSIONAL ENGINEER LESLIE E. ROBERTSON No. 34360 STATE OF NEW YORK

7-AB2-1

SKILLING - HELLE - CHRISTIANSEN - ROBERTSON Structural & Civil Engineers

PROJECT THE WORLD TRADE CENTER | TITLE FLOOR TRUSS (24 T 7, 7A & 7B | DATE 10-20-67

REVISIONS
1-3-68
1-26-68
4-1-68
7-22-68

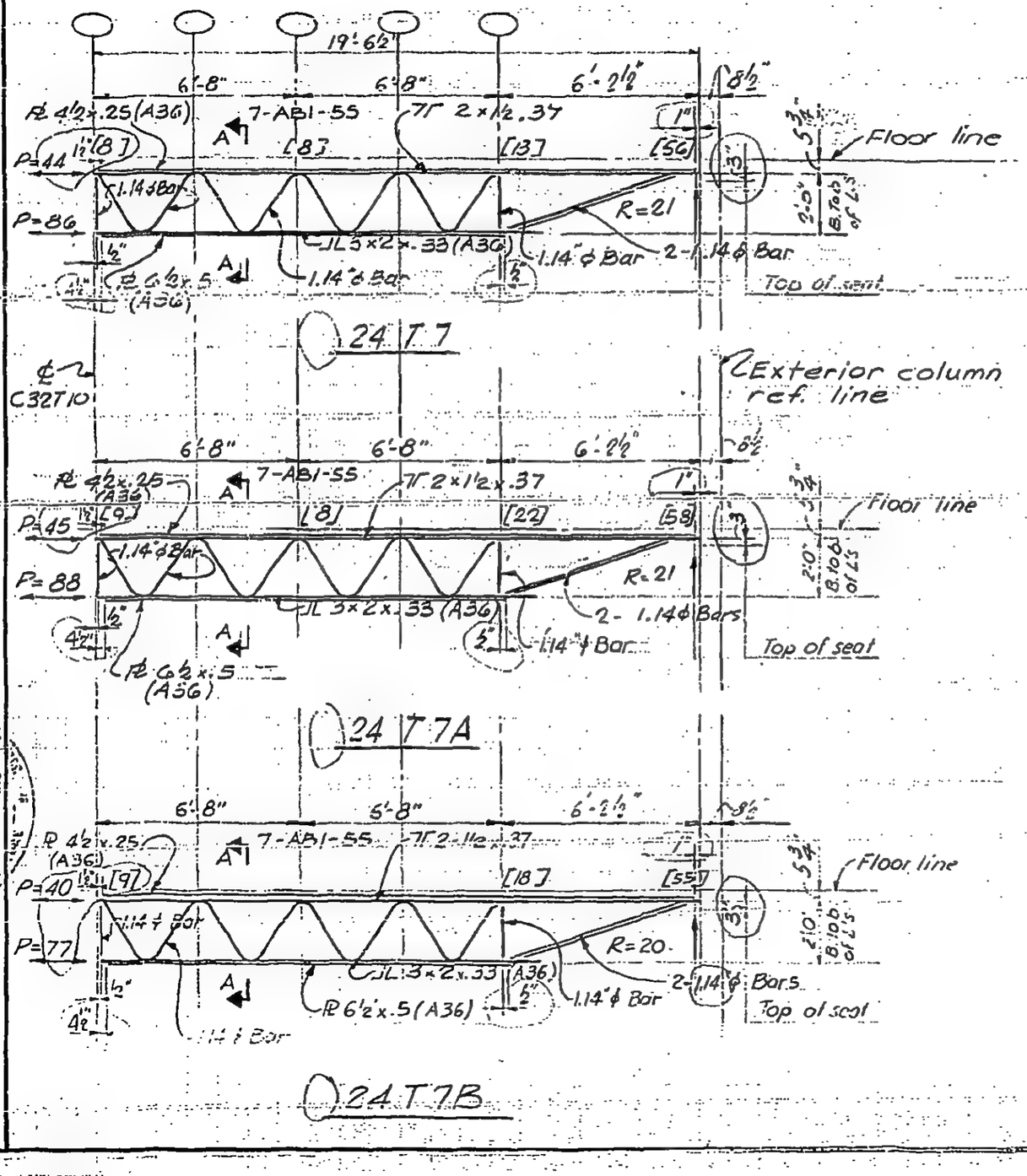

LICENSED PROFESSIONAL ENGINEER LESLIE E. ROBERTSON NO. 34360 STATE OF NEW YORK

15

7-AB2-2

SKILLING - HELLE - CHRISTIANSEN - ROBERTSON Structural & Civil Engineers

PROJECT: THE WORLD TRADE CENTER | TITLE: FLOOR TRUSS 24T8, 8A & 8B | DATE: 10-20-67

REVISIONS

1-3-68
1-26-68
4-1-68
4-15-68
7-22-68

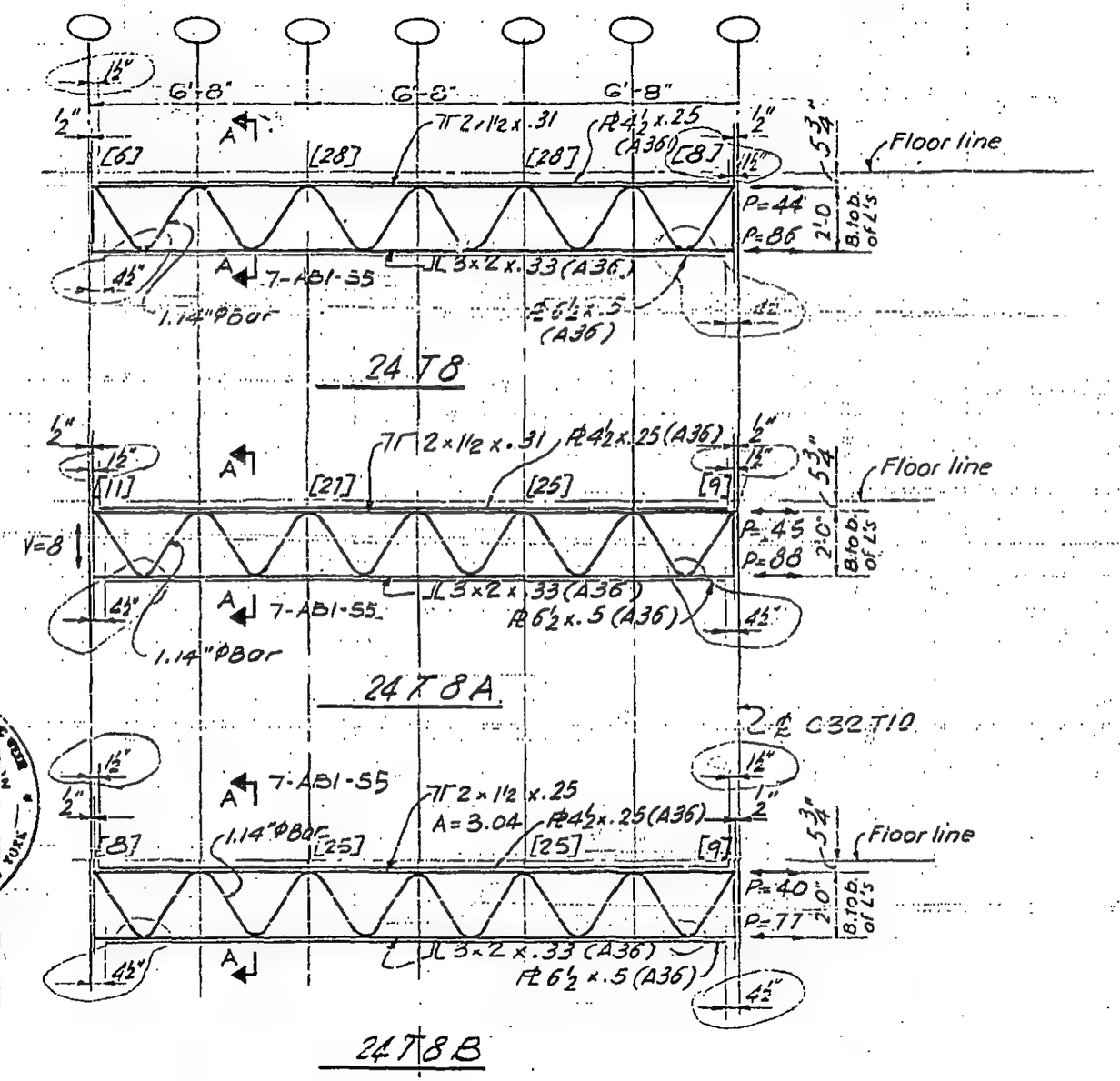

LICENSED PROFESSIONAL ENGINEER
LESLIE E. ROBERTSON
No. 34360
STATE OF NEW YORK

16

T-AB2-3

SKILLING - HELLE - CHRISTIANSEN - ROBERTSON Structural & Civil Engineers

PROJECT THE WORLD TRADE CENTER | TITLE FLOOR TRUSS 24 T9 & 9A | DATE 10-20-67

REVISIONS

1-3-68
1-26-68
4-1-68
7-22-68

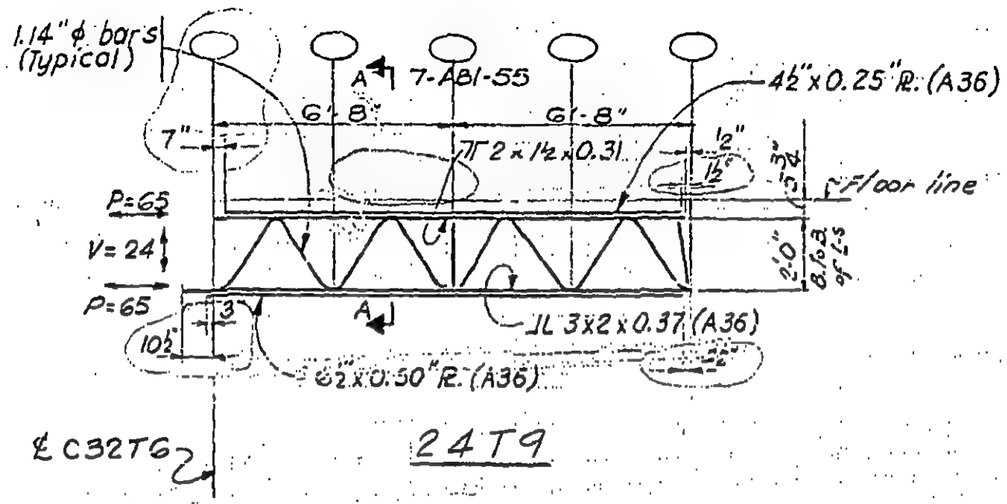

24T9

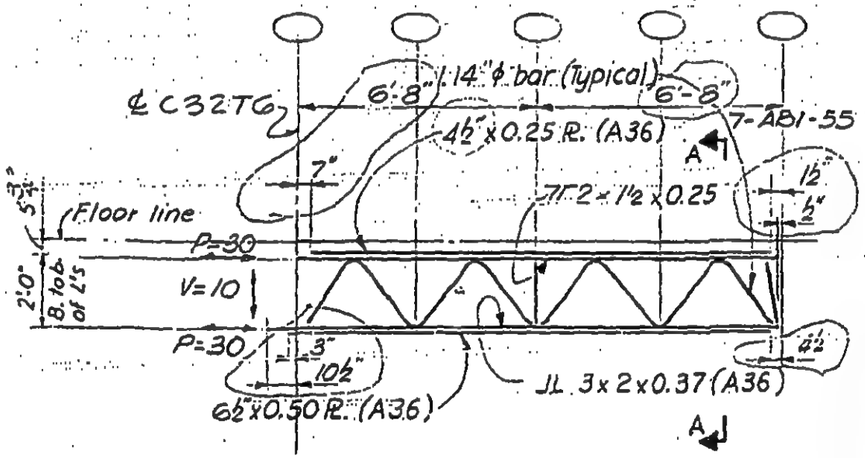

24T9A

LICENSED PROFESSIONAL ENGINEER LESLIE E. ROBERTSON No. 34360 UNIVERSITY OF THE STATE OF NEW YORK

7-AB2-4

SKILLING - HELLE - CHRISTIANSEN - ROBERTSON Structural & Civil Engineers

PROJECT: THE WORLD TRADE CENTER | TITLE: FLOOR TRUSS 24T 10, 10A, 10B | DATE: 10-20-67

REVISIONS

1-3-68
1-26-68
4-15-68
7-22-68

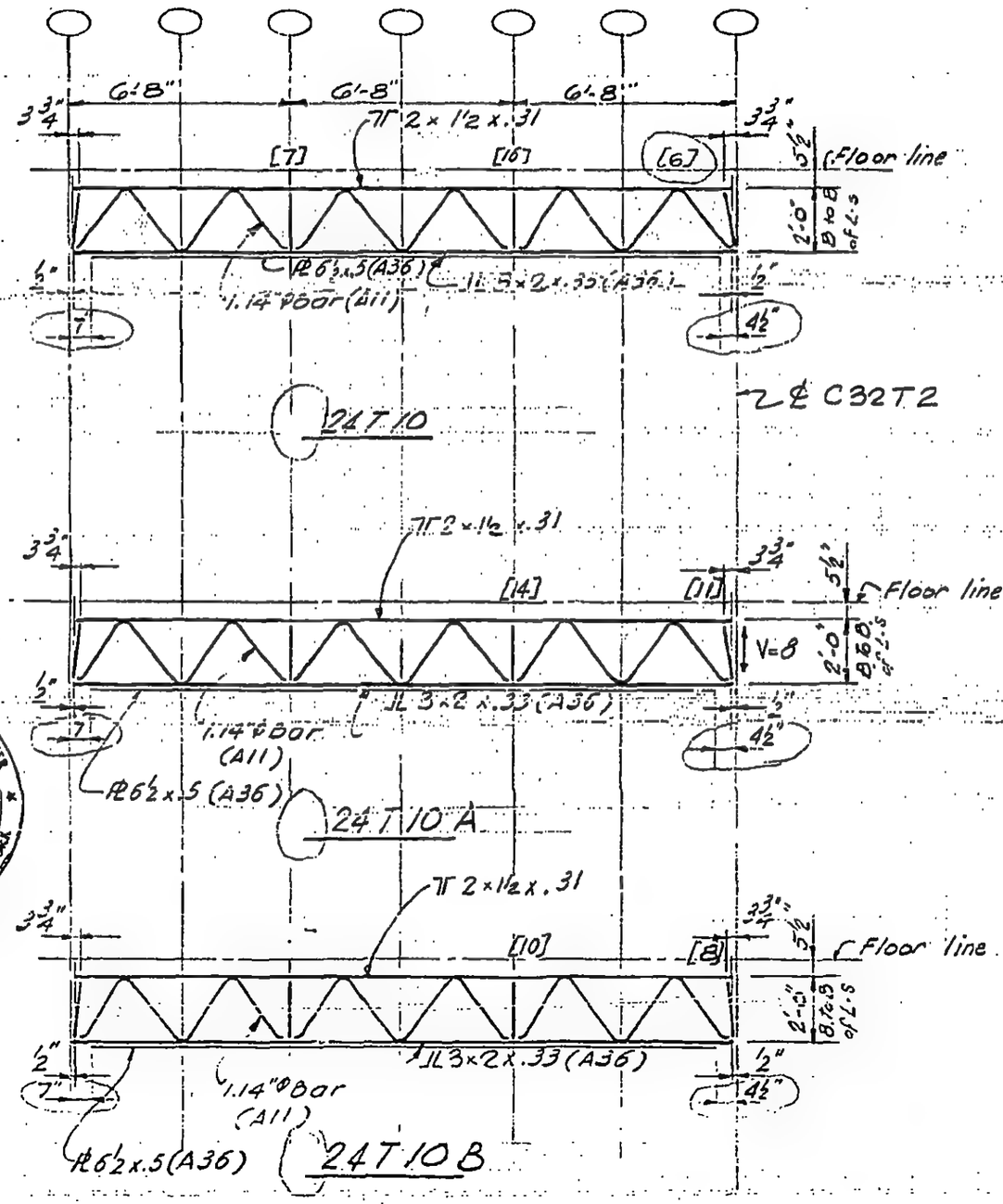

LICENSED PROFESSIONAL ENGINEER LESLIE E. ROBERTSON No. 34360 UNIVERSITY OF THE STATE OF NEW YORK

7-AB2-5

SKILLING - HELLE - CHRISTIANSEN - ROBERTSON — Structural & Civil Engineers

PROJECT: THE WORLD TRADE CENTER | TITLE: FLOOR BRIDGING 24 T 11, 11A | DATE: 10-20-67

REVISIONS
1-3-68
1-26-68
2-15-68
7-22-68

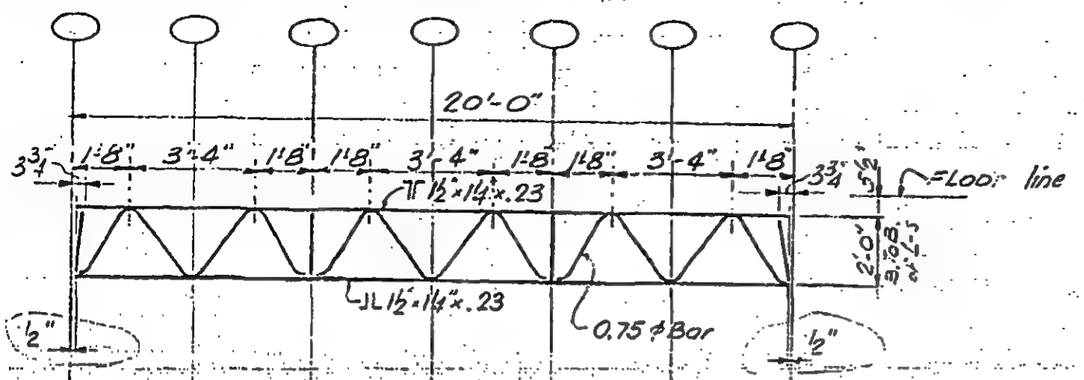

24 T 11

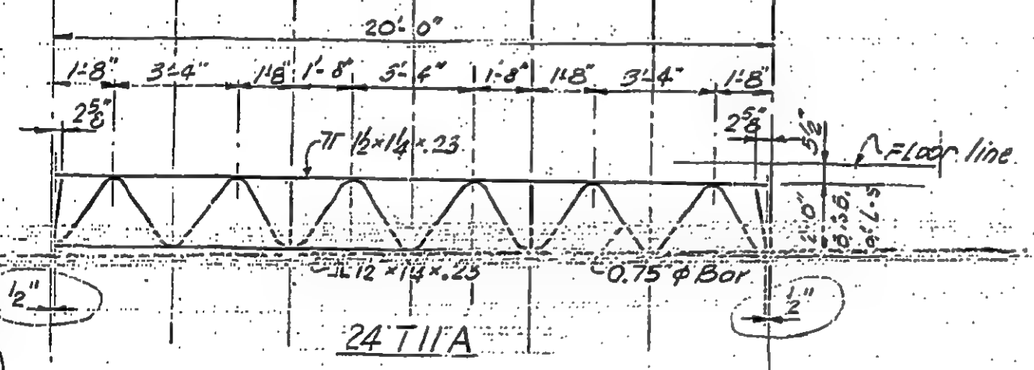

24 T 11A

LICENSED PROFESSIONAL ENGINEER
LESLIE E. ROBERTSON
No. 34360
UNIVERSITY OF THE STATE OF NEW YORK

1.9

7-AB2-6

SKILLING - HELLE - CHRISTIANSEN - ROBERTSON Structural & Civil Enginoors

PROJECT	TITLE	DATE
THE WORLD TRADE CENTER	FLOOR BRIDGING 24T12	10-20-67

REVISIONS

1-3-68
1-26-68
2-15-68
7-22-68

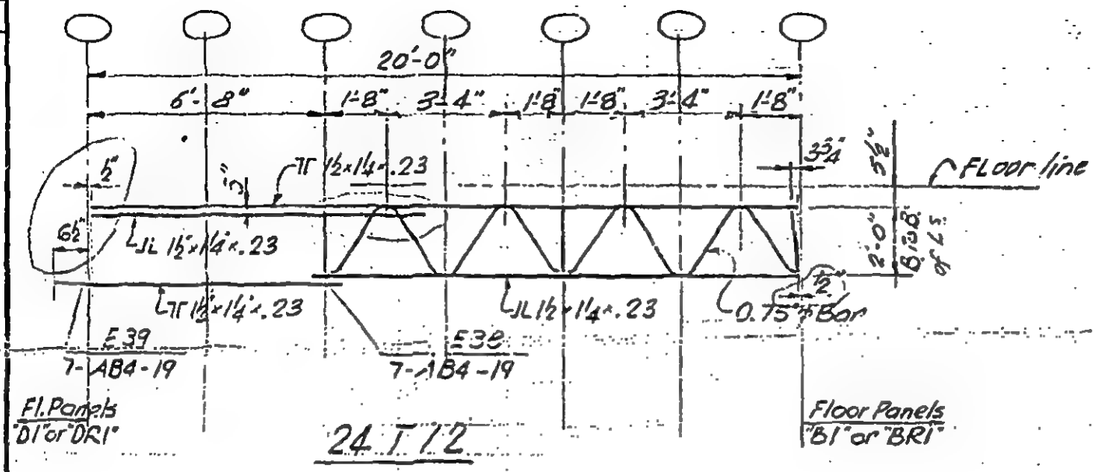

24T12

LICENSED PROFESSIONAL ENGINEER
LESLIE E. ROBERTSON
No. 34360
UNIVERSITY OF ILLINOIS

7-AB2-7

SKILLING - HELLE - CHRISTIANSEN - ROBERTSON — Structural & Civil Engineers

PROJECT: THE WORLD TRADE CENTER | TITLE: FLOOR BRIDGING 24T13, 13A, 13B, 13C | DATE: 10-20-67

REVISIONS
1-3-68
1-26-68
2-15-68
7-22-68

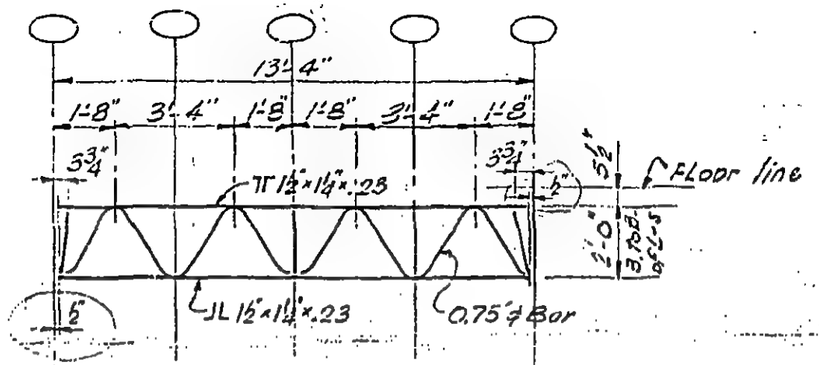

24 T 13

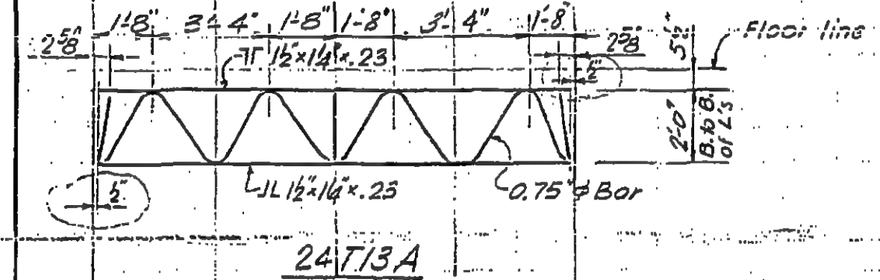

24 T 13A

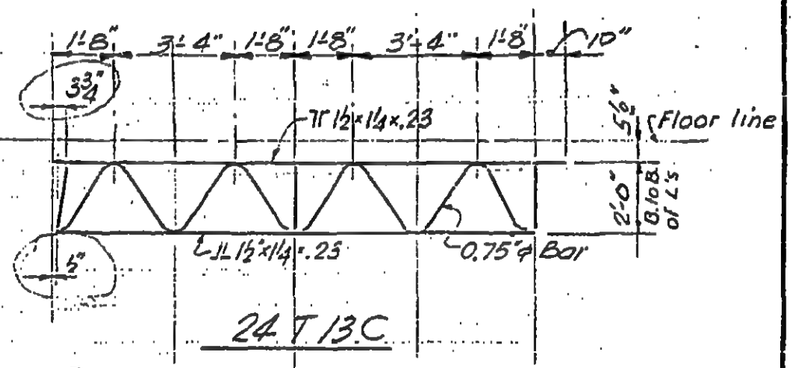

24 T 13C

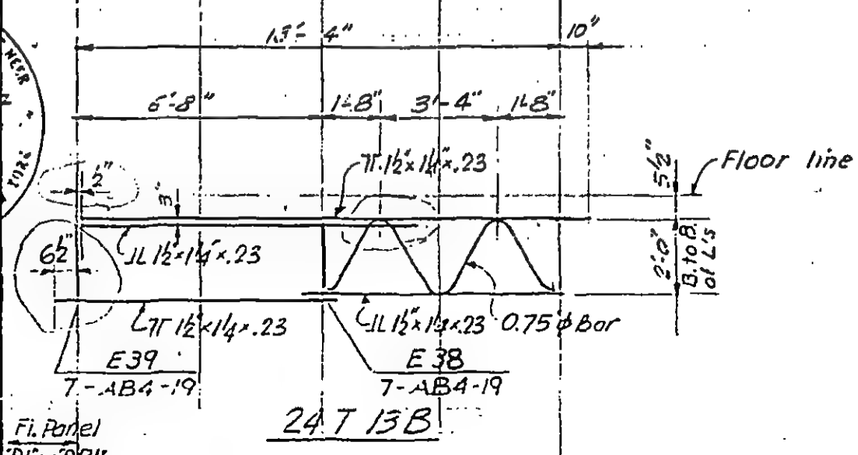

24 T 13B

LICENSED PROFESSIONAL ENGINEER
LESLIE E. ROBERTSON
No. 34360
UNIVERSITY OF THE STATE OF NEW YORK

7-AB2-8

SKILLING - HELLE - CHRISTIANSEN - ROBERTSON Structural & Civil Engineers

PROJECT THE WORLD TRADE CENTER | TITLE FLOOR TRUSS 24T14, 24T14B | DATE 1-3-68

REVISIONS

1-26-68
4-1-68
7-22-68
1-6-69

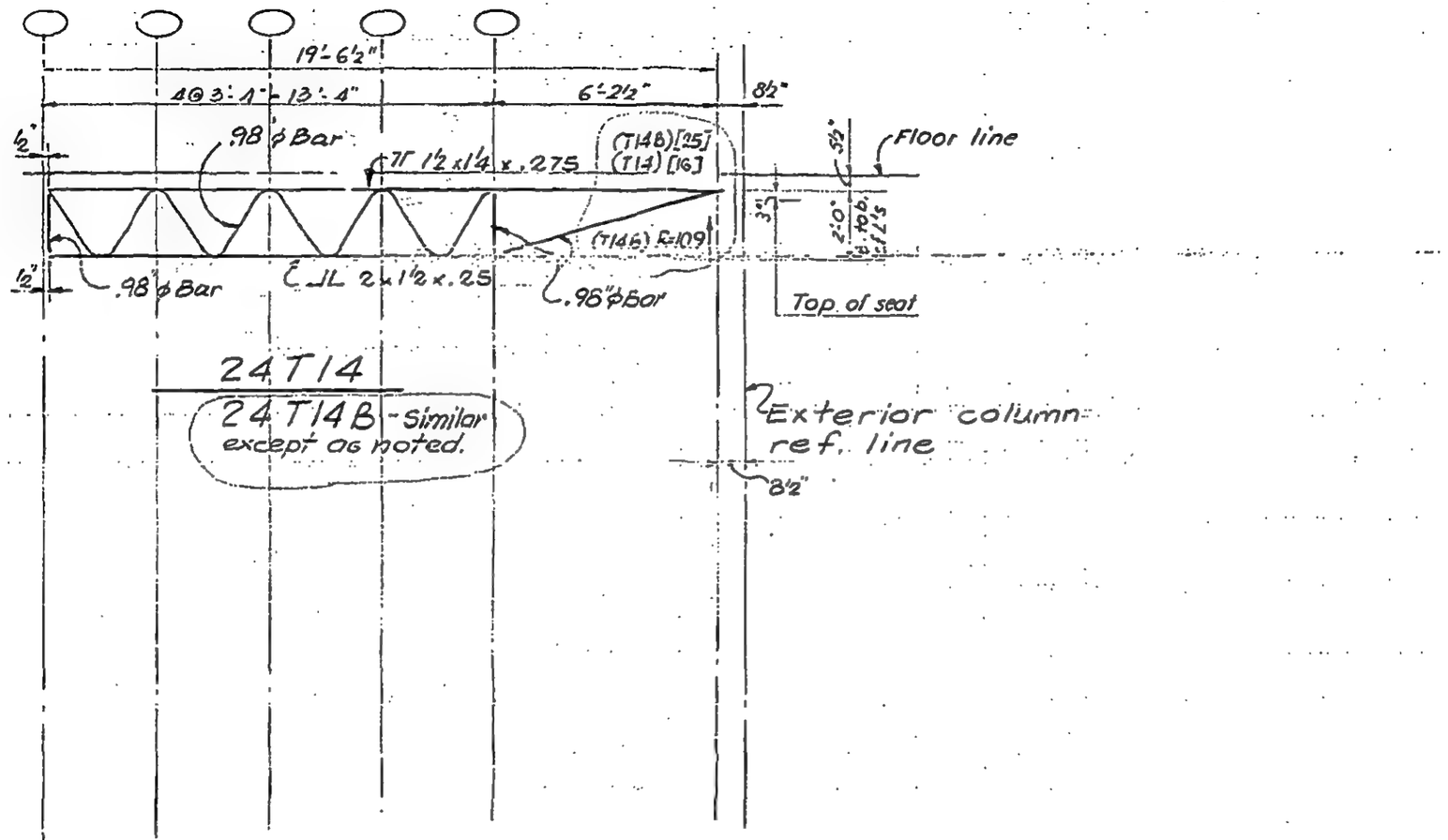

LICENSED PROFESSIONAL ENGINEER
LESLIE E. ROBERTSON
No. 34360
STATE OF NEW YORK

7-AB2-9

SKILLING - HELLE - CHRISTIANSEN - ROBERTSON Structural & Civil Enginoors

PROJECT THE WORLD TRADE CENTER | TITLE FLOOR TRUSS 24T15 | DATE 1-26-68

REVISIONS

4-1-68
4-15-68
7-22-68

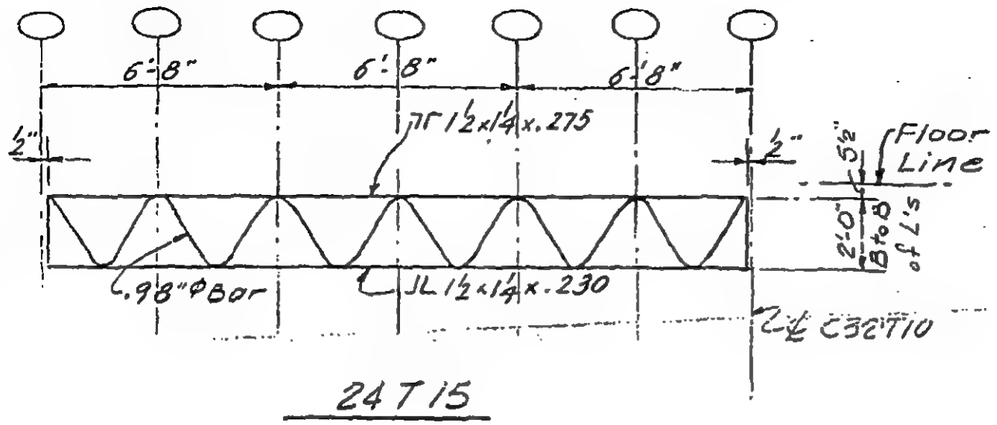

24T15

SKILLING - HELLE - CHRISTIANSEN - ROBERTSON Structural & Civil Engineers

PROJECT THE WORLD TRADE CENTER | TITLE FLOOR TRUSS 24T16 | DATE 1-26-68

REVISIONS

4-1-68
4-15-68
7-22-68

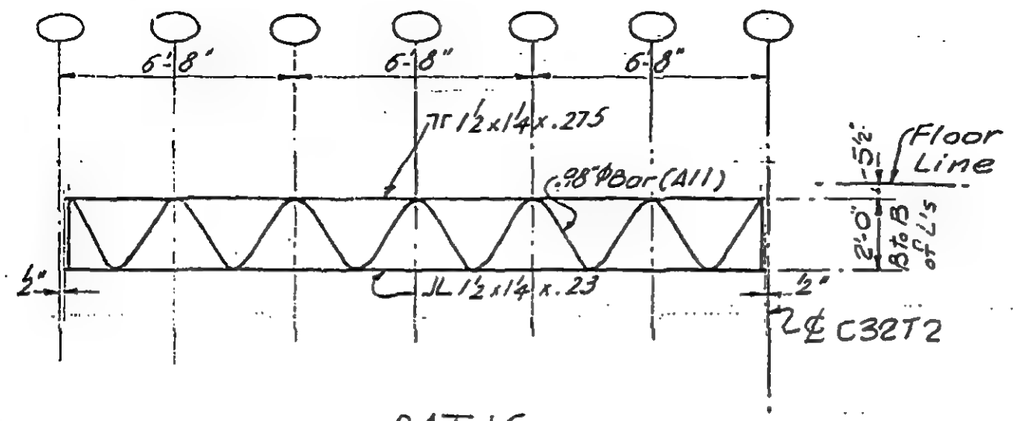

24T16

LICENSED PROFESSIONAL ENGINEER
LESLIE E. ROBERTSON
No. 34360
UNIVERSITY OF THE STATE OF NEW YORK

2.41

7-AB2-71

SKILLING - HELLE - CHRISTIANSEN - ROBERTSON Structural & Civil Engineers

PROJECT THE WORLD TRADE CENTER | TITLE FLOOR TRUSS 24T7C, 24T7D, 24T7E | DATE 8-15-68

REVISIONS

10-4-68

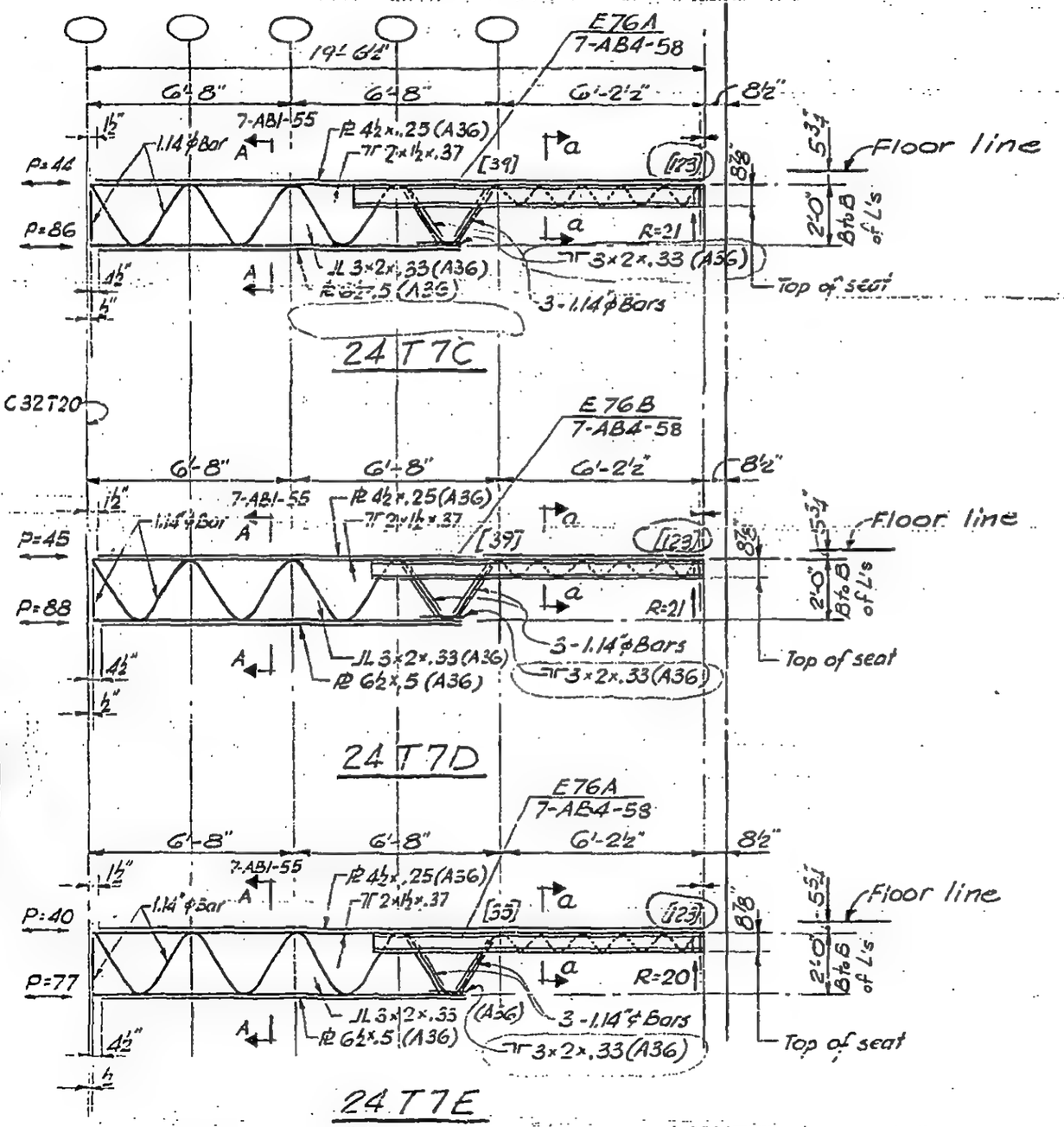

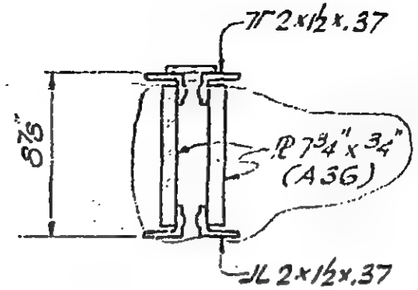

Section a-a

7-AB2-12

SKILLING, HELLE, CHRISTIANSEN, ROBERTSON — Structural & Civil Engineers

PROJECT: THE WORLD TRADE CENTER | TITLE: FLOOR TRUSS 24T10C, 24T10D & 24T10E | DATE: 8-15-68

REVISIONS

10-4-68

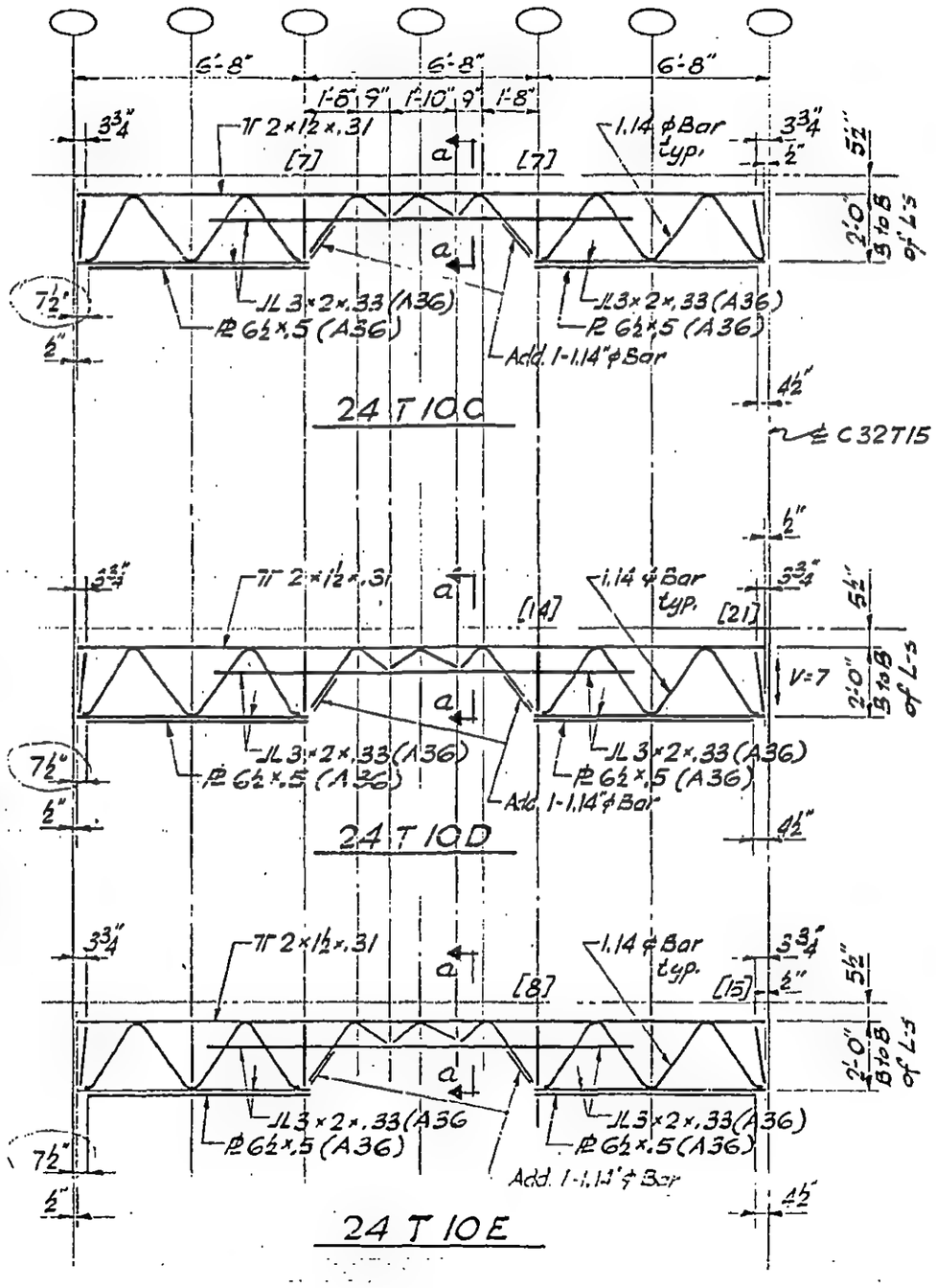

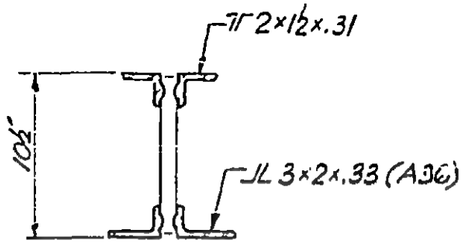

Section a-a

DESIGNED

DRAWN

REVIEWED

7-AB2-13

SKILLING, HELLE, CHRISTIANSEN, ROBERTSON — Structural & Civil Engineers

PROJECT THE WORLD TRADE CENTER | TITLE FLOOR TRUSS 24T14A, 24T15A, 24T16A | DATE 8-15-68

REVISIONS

10-4-68

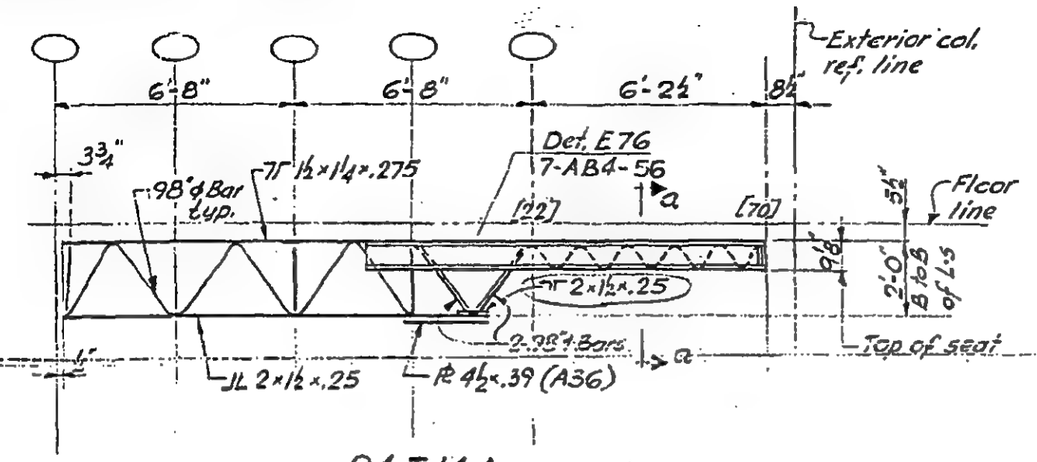

24T14A

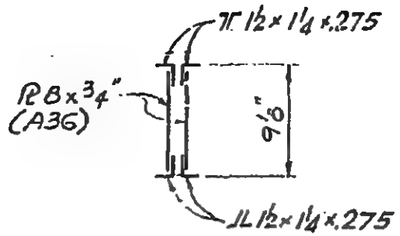

Section a-a

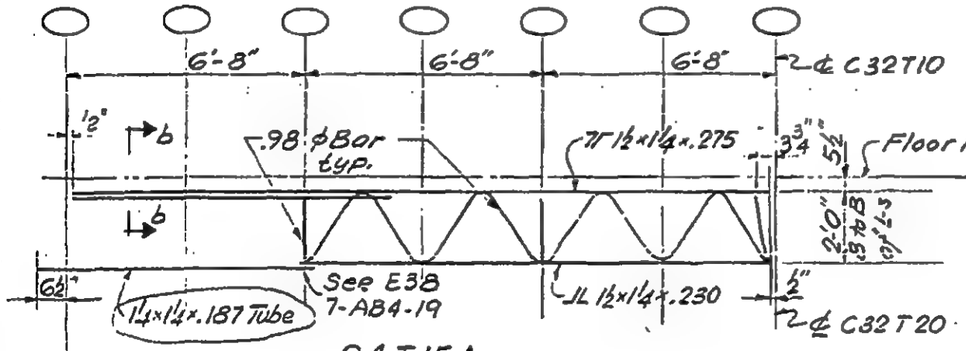

24T15A

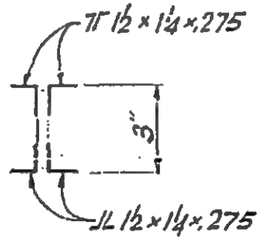

Section b-b

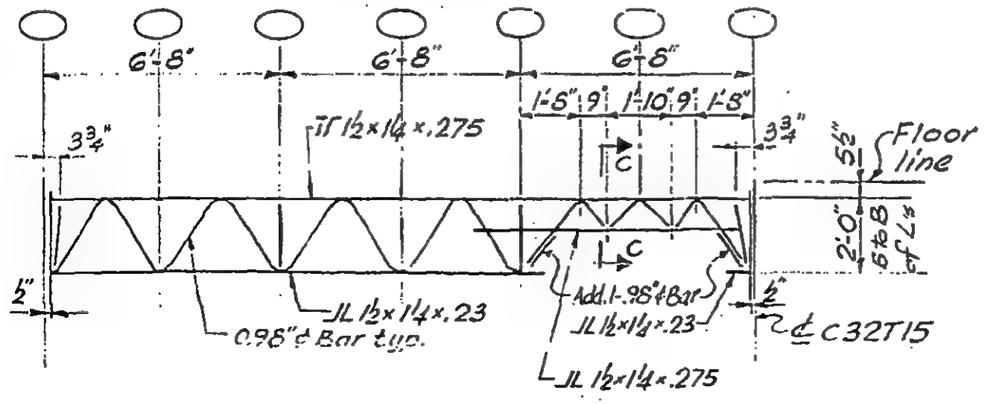

24T16A

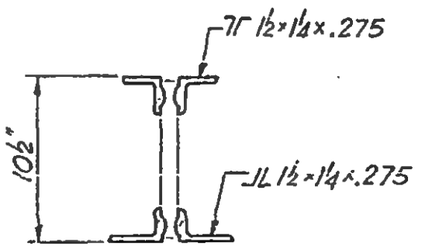

Section c-c

LICENSED PROFESSIONAL ENGINEER
LESLIE E. ROBERTSON
No. 34[illegible]
UNIVERSITY OF THE STATE OF NEW YORK

DESIGNED

DRAWN

REVIEWED

T-AB2-14

SKILLING, HELLE, CHRISTIANSEN, ROBERTSON — Structural & Civil Engineers

PROJECT: THE WORLD TRADE CENTER | TITLE: FLOOR TRUSS 24 T 11B, 24 T 11C | DATE: 8-1-66

REVISIONS

10-4-68

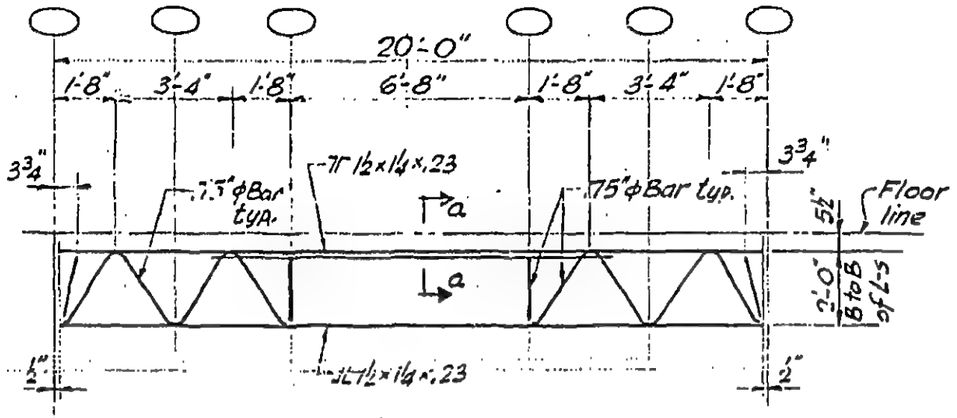

24 T 11B

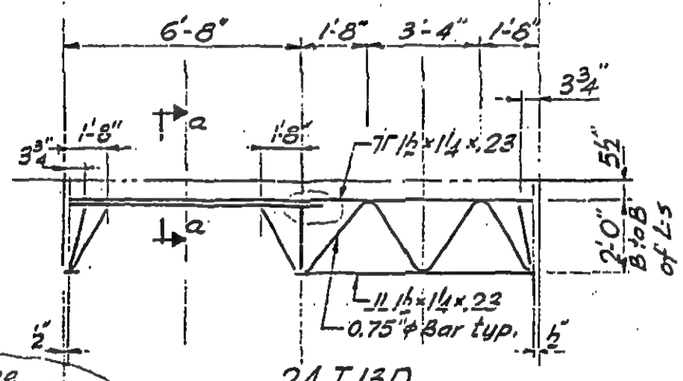

See Note "A"

24 T 13D

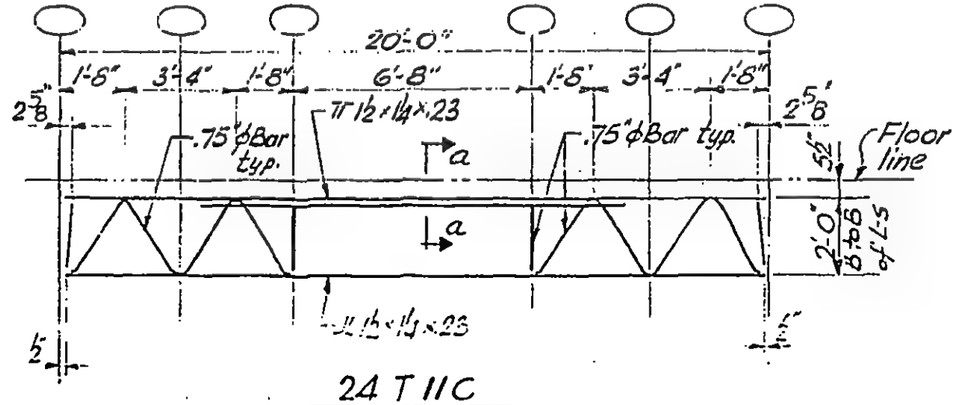

24 T 11C

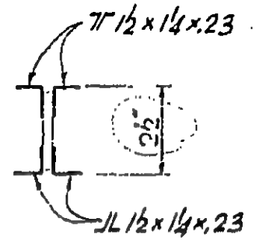

Section a-a

Note "A":
This end of truss to adjoin panels C or CR except in panel B7-EA85 where it should be reversed.

DESIGNED

DRAWN

REVIEWED

7-AB2-15

SKILLING - HELLE - CHRISTIANSEN - ROBERTSON Structural & Civil Engineers

PROJECT THE WORLD TRADE CENTER | TITLE FLOOR TRUSS 24T7F, 24T7G, 24T7H | DATE 1-6-69

REVISIONS

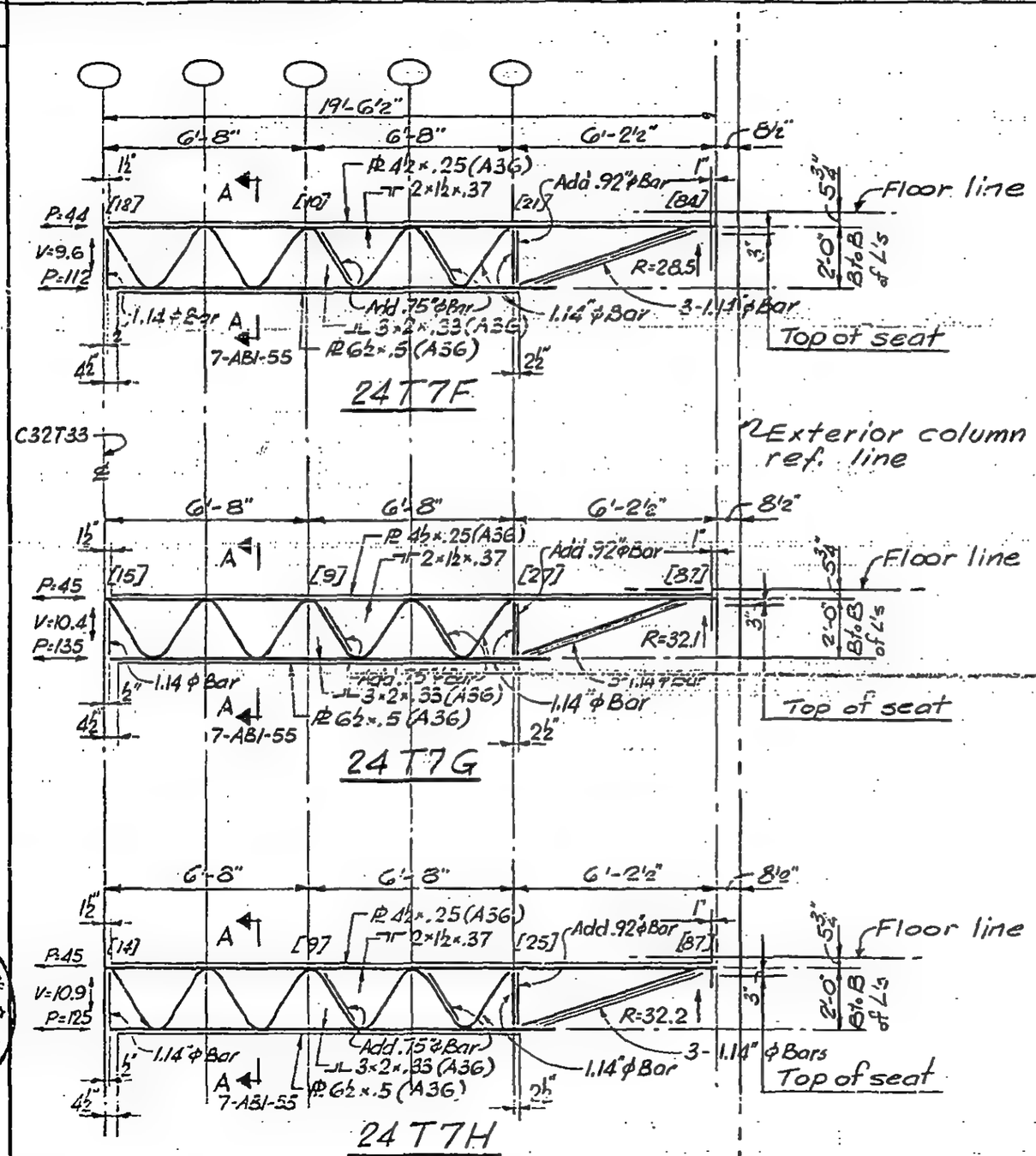

LICENSED PROFESSIONAL ENGINEER
LESLIE E. ROBERTSON
No. 34360
UNIVERSITY OF THE STATE OF NEW YORK

7-AB2-16

SKILLING, HELLE, CHRISTIANSEN, ROBERTSON — Structural & Civil Engineers

PROJECT: THE WORLD TRADE CENTER | TITLE: FLOOR TRUSS 24T16B, 24T16C | DATE: 8-15-68

REVISIONS

10-4-68

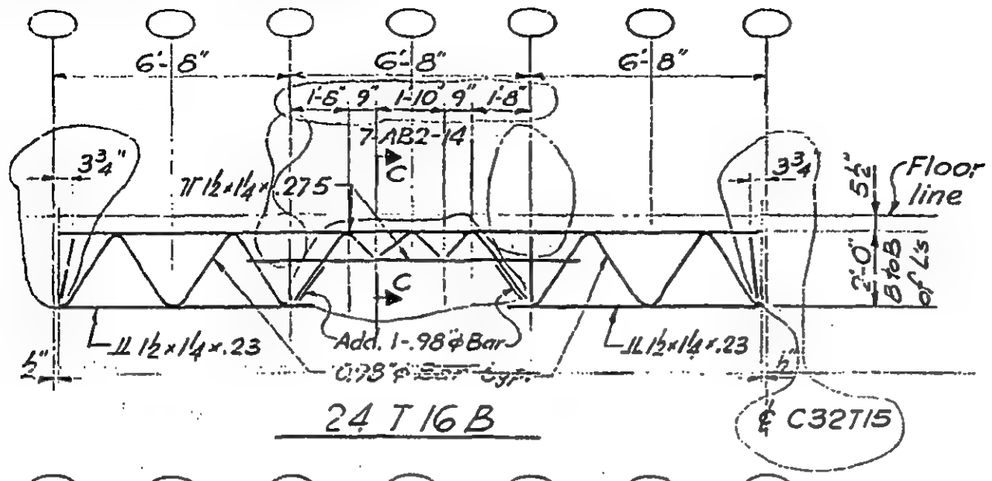

24 T 16B

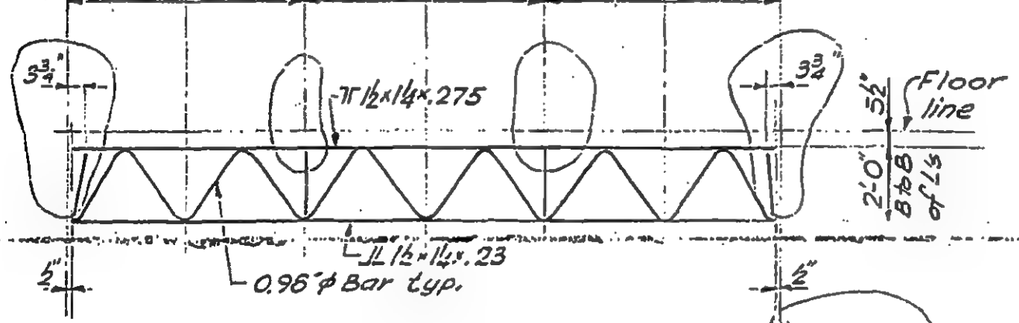

24 T 16C

LICENSED PROFESSIONAL ENGINEER
LESLIE E. ROBERTSON
No. 34360
UNIVERSITY OF THE STATE OF NEW YORK

DESIGNED

DRAWN

REVIEWED

7-AB2-17

SKILLING, HELLE, CHRISTIANSEN, ROBERTSON — Structural & Civil Engineers

PROJECT THE WORLD TRADE CENTER | TITLE FLOOR TRUSS 24T10F, 24T10G & 24T10H | DATE 8-15-68

REVISIONS

10-4-68

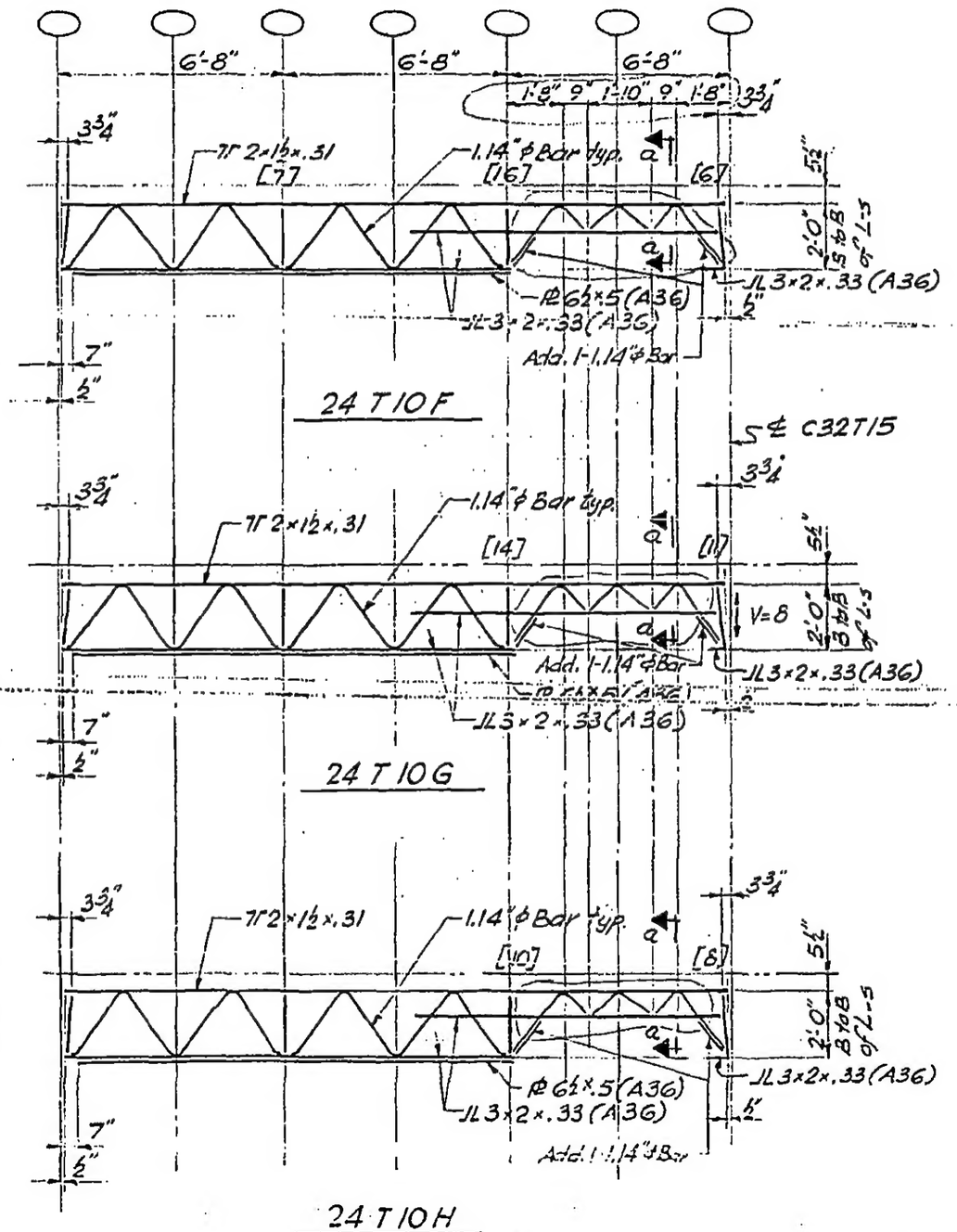

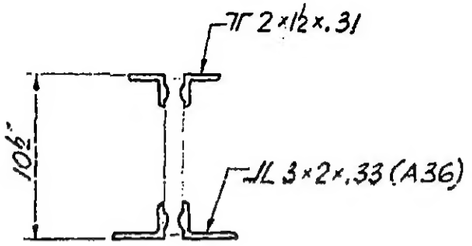

Section a-a

LICENSED PROFESSIONAL ENGINEER
LESLIE E. ROBERTSON
No. 34360
UNIVERSITY OF THE STATE OF NEW YORK

DESIGNED

DRAWN

REVIEWED

7-AB2-18

SKILLING - HELLE - CHRISTIANSEN - ROBERTSON — Structural & Civil Engineers

PROJECT: THE WORLD TRADE CENTER | TITLE: FLOOR TRUSS 24T8C, 8D, 8E | DATE: 1-6-69

REVISIONS

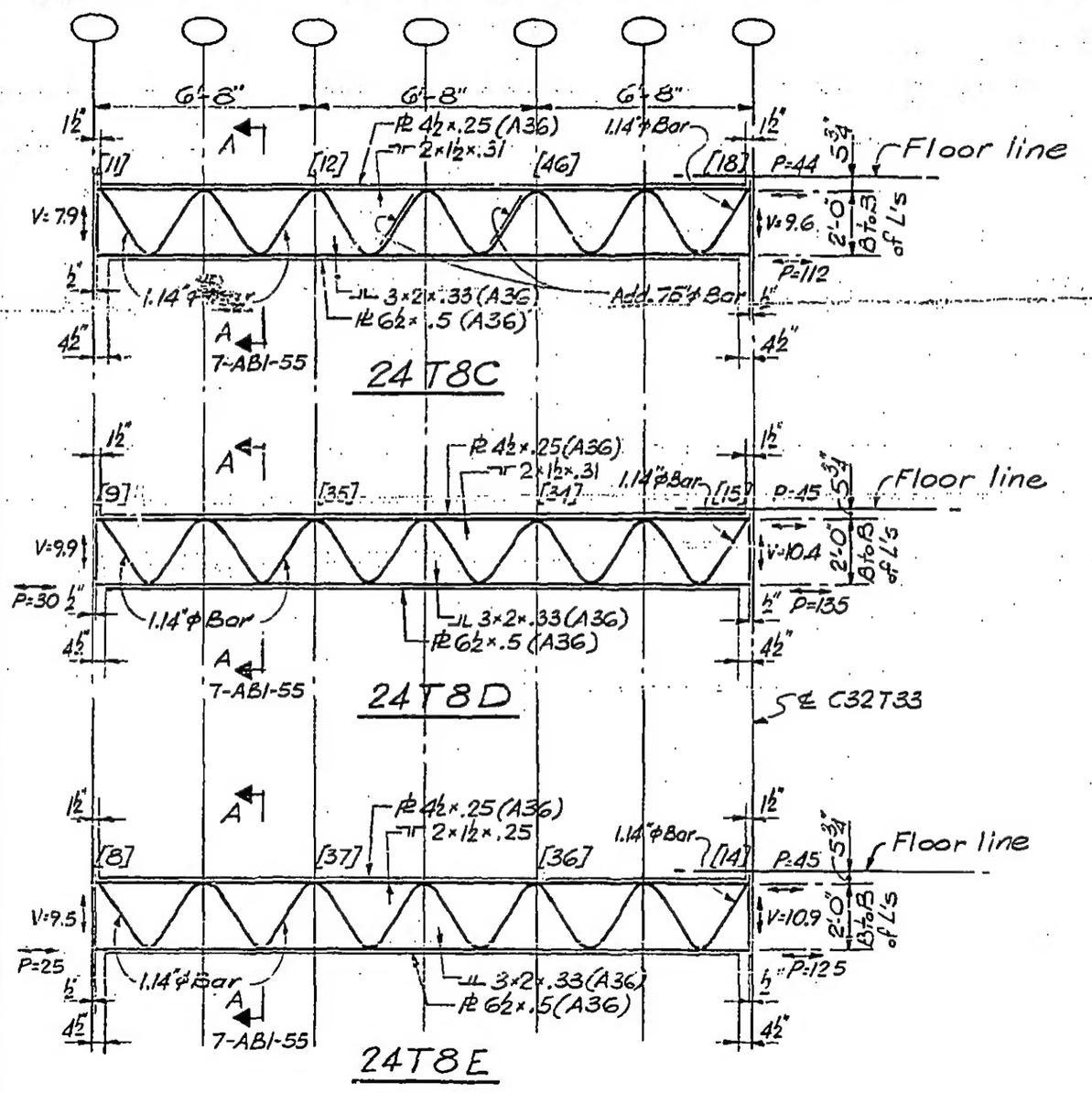

LICENSED PROFESSIONAL ENGINEER
LESLIE E. ROBERTSON
No. 34360
UNIVERSITY OF THE STATE OF NEW YORK

7-AB2-19

SKILLING - HELLE - CHRISTIANSEN - ROBERTSON Structural & Civil Engineers

PROJECT THE WORLD TRADE CENTER | TITLE FLOOR TRUSSES 24T10J, 10K & 10L | DATE 1-6-69

REVISIONS

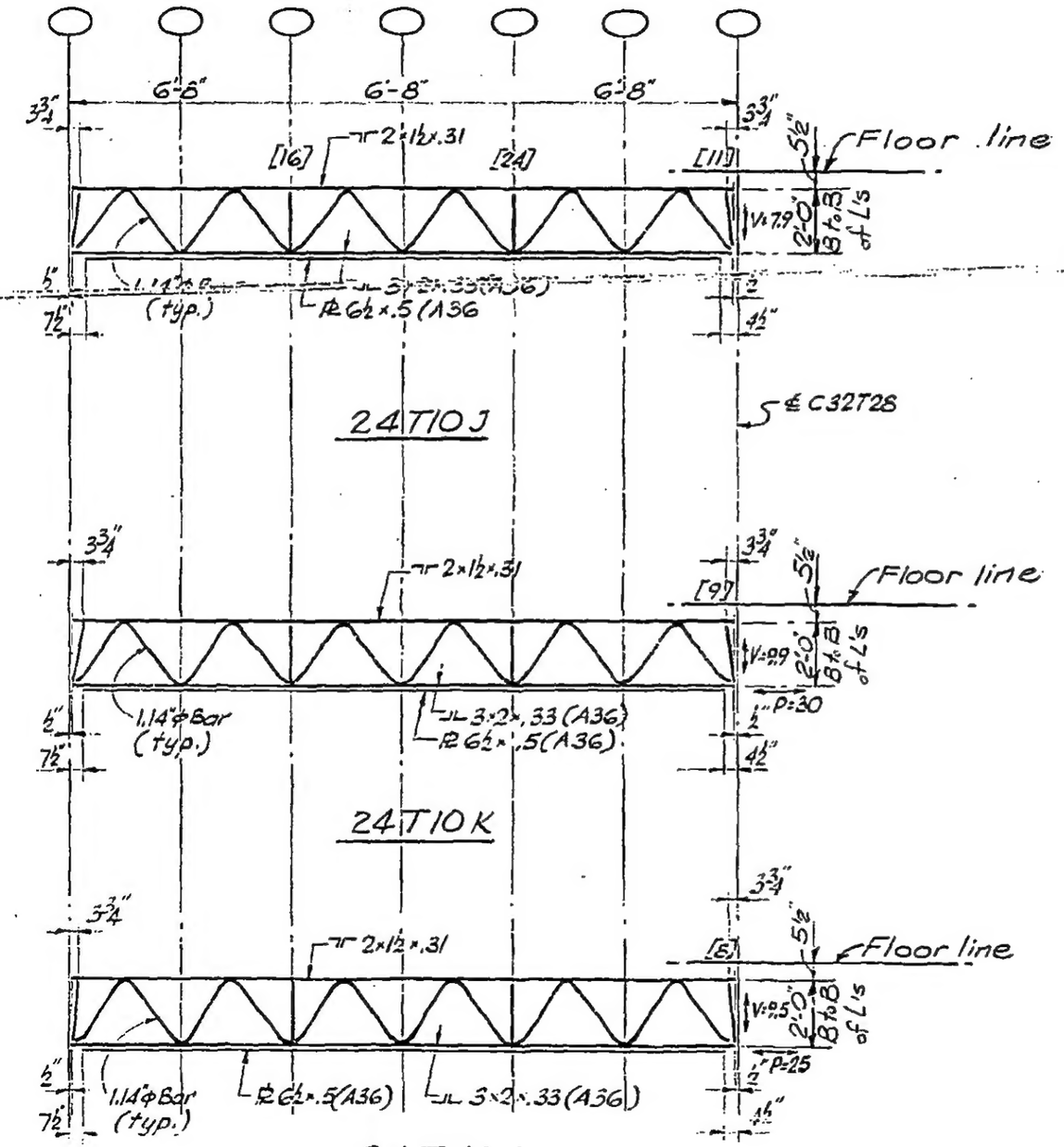

LICENSED PROFESSIONAL ENGINEER LESLIE E. ROBERTSON No. 34360 UNIVERSITY OF THE STATE OF NEW YORK

7-AB2-20

WTC-1057-LEBA